Model 429

FoodKing

PARTS MANUAL

12955 Enterprise Way
Bridgeton, Missouri 63044-1200
(314) 298-3500

4290000

Copyright © 9-99

LIST OF FIGURES

Figure	Title	Page
1.	FoodKing Merchandiser	1
2.	Outer Door Assembly	2
3.	Trim Panels	4
4.	Door Trim	6
5.	Face Plate Assembly	8
6.	Major Assemblies (Part 1 of 2)	10
7.	Major Assemblies (Part 2 of 2)	12
8.	Outer Door Interior	14
9.	Door Lock and Handle Assembly	16
10.	Monetary Assembly	18
11.	Money Box and Housing Assembly	20
12.	Shadow Box and Blower Assembly	22
13.	Blower Assembly	24
14.	Lock Bar Assembly	26
15.	Inner Door Exterior	28
16.	Inner Door Interior	30
17.	Vend Door Solenoid Assembly	32
18.	Vend Door	34
19.	Base Plate Accessory and Miscellaneous Cabinet Parts	36
20.	Switch and Mounting Bracket Assembly	38
21.	Turret Assembly	40
22.	Inner Panels	42
23.	Light Assembly - Return Air - Black	44
24.	Tray Half Assembly	46
25.	Power Panel Assembly (U.K./U.S.)	48
26.	Power Panel Assembly (France/Germany)	50
27.	Turret Motor Assembly	52
28.	Refrigeration Unit	54
29.	Refrigeration Unit Components (Part 1 of 4)	56
30.	Refrigeration Unit Components (Part 2 of 4)	58
31.	Refrigeration Unit Components (Part 3 of 4)	60
32.	Refrigeration Unit Components (Part 4 of 4)	62
33.	Cabinet Components - Rear	64

LIST OF TABLES

Table	Title	Page
1.	FoodKing Merchandiser	1
2.	Outer Door Assembly	3
3.	Trim Panels	5
4.	Door Trim	7
5.	Face Plate Assembly	9
6.	Major Assemblies (Part 1 of 2)	11
7.	Major Assemblies (Part 2 of 2)	13
8.	Outer Door Interior	15
9.	Door Lock and Handle Assembly	17
10.	Monetary Assembly	19
11.	Money Box and Housing Assembly	21
12.	Shadow Box and Blower Assembly	23
13.	Blower Assembly	25
14.	Lock Bar Assembly	27
15.	Inner Door Exterior	29
16.	Inner Door Interior	31
17.	Vend Door Solenoid Assembly	33
18.	Vend Door	35
19.	Base Plate Accessory and Miscellaneous Cabinet Parts	37
20.	Switch and Mounting Bracket Assembly	39
21.	Turret Assembly	41
22.	Inner Panels	43
23.	Light Assembly - Return Air - Black	45
24.	Tray Half Assembly	47
25.	Power Panel Assembly (U.K./U.S.)	49
26.	Power Panel Assembly (France/Germany)	51
27.	Turret Motor Assembly	53
28.	Refrigeration Unit	55
29.	Refrigeration Unit Components (Part 1 of 4)	57
30.	Refrigeration Unit Components (Part 2 of 4)	59
31.	Refrigeration Unit Components (Part 3 of 4)	61
32.	Refrigeration Unit Components (Part 4 of 4)	63
33.	Cabinet Components - Rear	65
35.	Miscellaneous Harnesses (Not Shown)	73
36.	Bag Assembly - U.S. - B4270000	73
37.	Bag Assembly - U.K. - B4270003	73
38.	Bag Assembly - France - B4270001	74
39.	Bag Assembly - Germany - B4270002	74

FoodKing Parts Manual

TABLE 1. FOODKING MERCHANDISER

INDEX	PART NUMBER	DESCRIPTION	QTY.
1	4270025	LABEL - “LOCATE FOOD HERE”	8
2	-	VEND DOOR (SEE FIGURE 18)	-
3	4270814	BASE PLATE ACCESSORY	OPT.
4	4291018	FOAM CABINET ASSEMBLY - BLACK	1
	4291029	FOAM CABINET ASSEMBLY - NUWHITE	

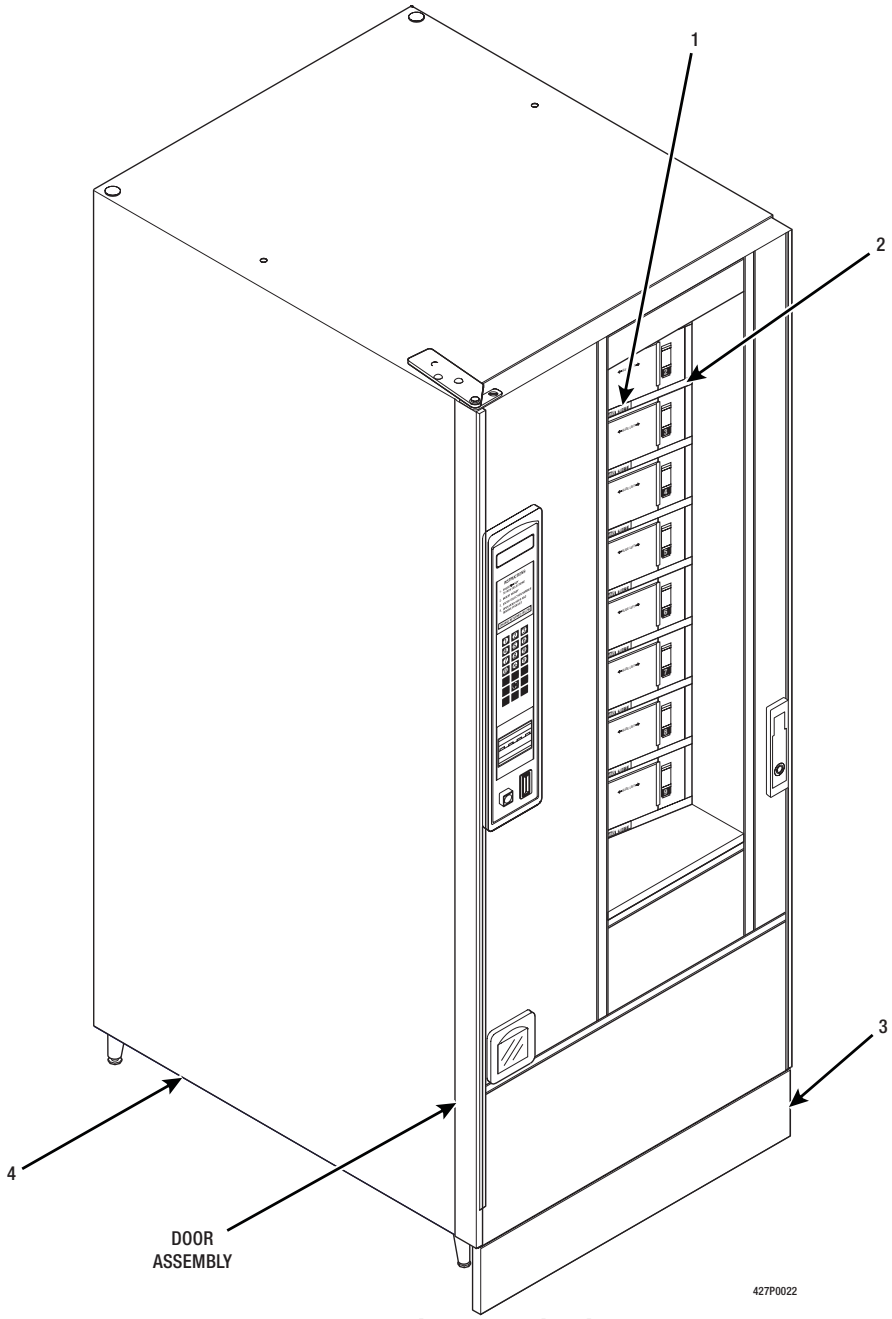

Figure 1. FoodKing Merchandiser

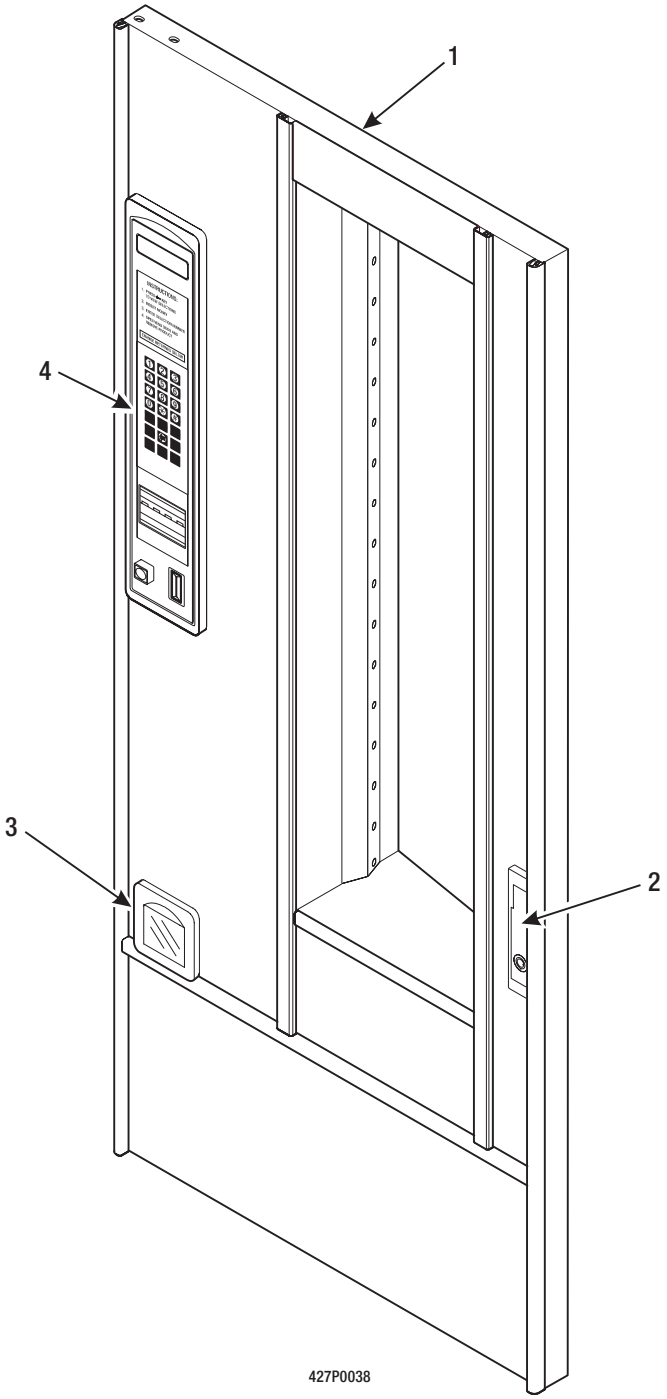

Figure 2. Outer Door Assembly

TABLE 2. OUTER DOOR ASSEMBLY

INDEX	PART NUMBER	DESCRIPTION	QTY.
1	4292000	DOOR ASSEMBLY - COMMON	1
	4292008	DOOR ASSEMBLY - COMMON - GENERATION	
2	-	DOOR LOCK (SEE FIGURE 9)	1
3	1572010	CUP - COIN RETURN (SEE FIGURE 8)	1
4	-	MONETARY ASSEMBLY (SEE FIGURE 10)	1

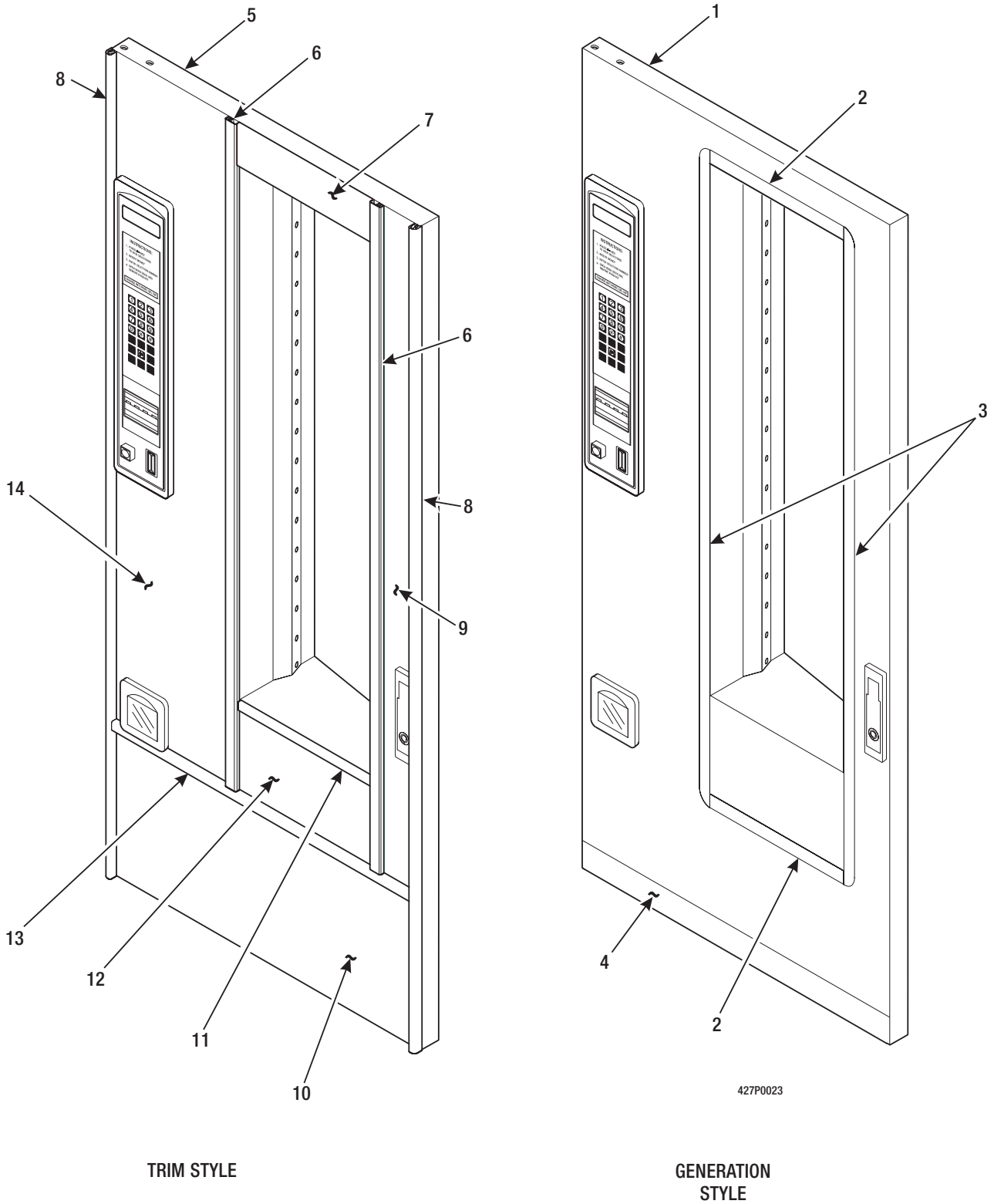

Figure 3. Trim Panels

TABLE 3. TRIM PANELS

INDEX	PART NUMBER	DESCRIPTION	
1	4292008	DOOR ASSEMBLY- COMMON - GENERATION (INCLUDES ITEMS 2 - 4)	OPT.
2	4272054	DECAL - TRIM - HORIZONTAL - 12.41" (GPL)	2
3	1592063	DECAL - TRIM - VERTICAL - 52.52" (GPL)	2
4	4272055	DECAL - TRIM - HORIZONTAL - BOTTOM - 28.2" (GPL)	1
5	4292000	DOOR ASSEMBLY - COMMON (INCLUDES ITEMS 6-14)	OPT.
6	1592031	TRIM - DOOR - INSIDE - CLEAR	1
	1592068	TRIM - DOOR - INSIDE - BLACK	
	1592077	TRIM - DOOR - INSIDE - KLIX GRAY	
7	4272031	PANEL - HORIZONTAL TRIM - MEDIUM GRAY	1
8	1592032	TRIM - DOOR - SIDE - CLEAR	1
	1592069	TRIM - DOOR - SIDE - BLACK	
	1592078	TRIM - DOOR - SIDE - KLIX GRAY	
9	4272033	PANEL - R.H. TRIM - LIGHT GRAY	1
10	4272035	PANEL - LOWER HORIZONTAL - CLEAR	1
11	4272028	TRIM - DOOR - HORIZONTAL - CLEAR	1
	4272068	TRIM - DOOR - HORIZONTAL - BLACK	
	4272089	TRIM - DOOR - HORIZONTAL - KLIX GRAY	
12	4272039	PANEL - LOWER - MIDDLE - LIGHT GRAY	1
13	4272040	TRIM - DOOR - HORIZONTAL - CLEAR	1
	4272069	TRIM - DOOR - HORIZONTAL - BLACK	
	4272091	TRIM - DOOR - HORIZONTAL - KLIX GRAY	
14	4272037	PANEL - L.H. TRIM - LIGHT GRAY	1

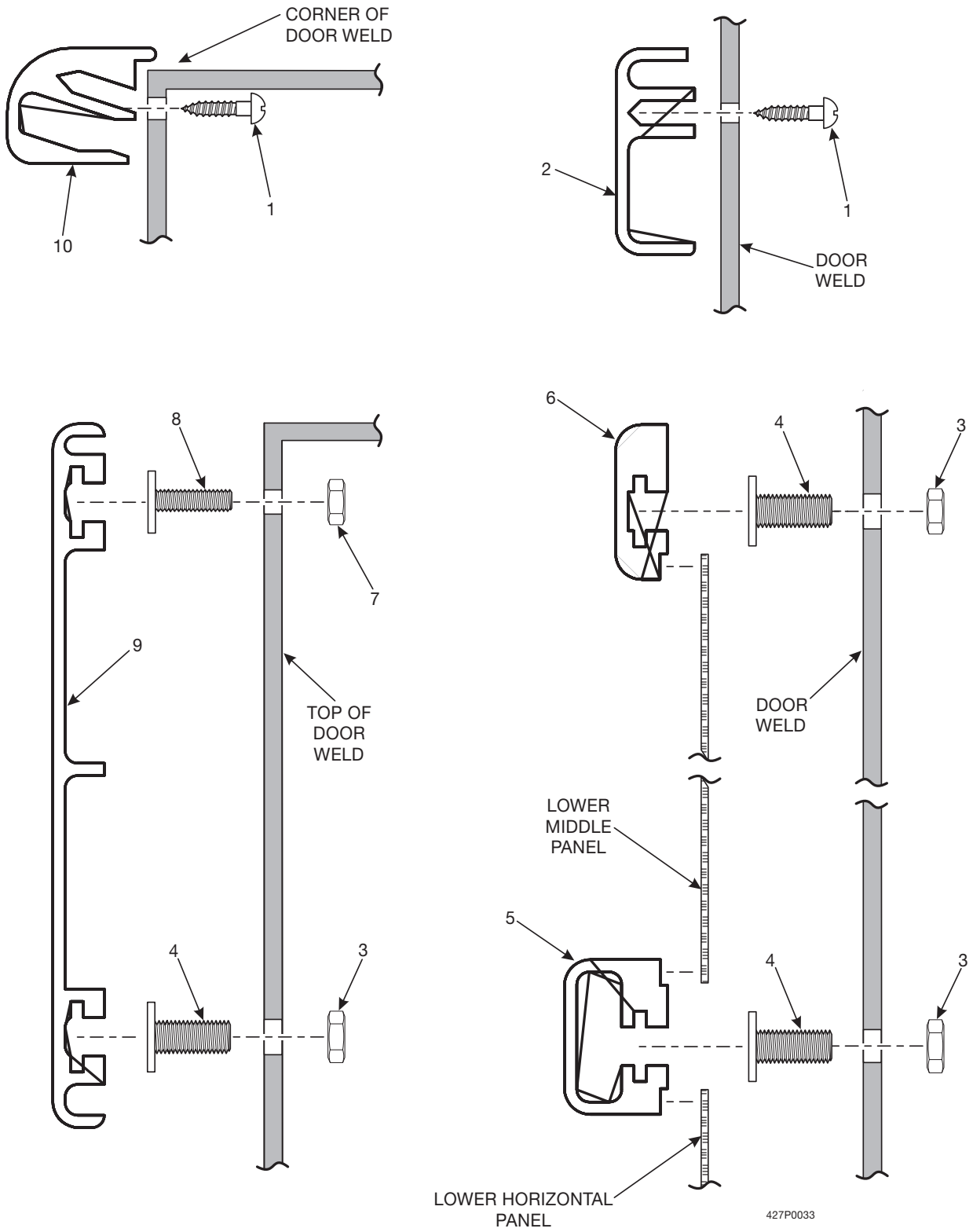

Figure 4. Door Trim

TABLE 4. DOOR TRIM

	PART NUMBER	DESCRIPTION	QTY
1	G1472028	SCREW - #6 X .38 SHEET METAL	32
2	1592031	TRIM - DOOR - INSIDE - CLEAR	2
	1592068	TRIM - DOOR - INSIDE - BLACK	
3	9900081	NUT - #8-32 KEPS ZINC PLATE	15
4	2222110	T BOLT TRIM	15
5	4272040	TRIM - DOOR - HORIZONTAL - CLEAR	1
	4272069	TRIM - DOOR - HORIZONTAL - BLACK	
6	1592068	TRIM - DOOR - INSIDE - BLACK	2
	1592031	TRIM - DOOR - INSIDE - CLEAR	
	1592077	TRIM - DOOR - INSIDE - KLIX GRAY	
	4272068	TRIM - DOOR - HORIZONTAL - BLACK	1
	4272028	TRIM - DOOR - HORIZONTAL - CLEAR	
	4272089	TRIM - DOOR - HORIZONTAL - KLIX GRAY	
	4272091	TRIM - DOOR - HORIZONTAL - KLIX GRAY	
7	9900078	NUT - #6-32 KEPS ZINC PLATE	3
8	1572060	TEE BOLT - TRIM - #6-32 X 3/8	3
9	4272031	PANEL - HORIZONTAL TRIM - MEDIUM GRAY	1
10	1592032	TRIM - DOOR - SIDE - CLEAR	1
	1592069	TRIM - DOOR - SIDE - BLACK	
	1592078	TRIM - DOOR - SIDE - KLIX GRAY	2

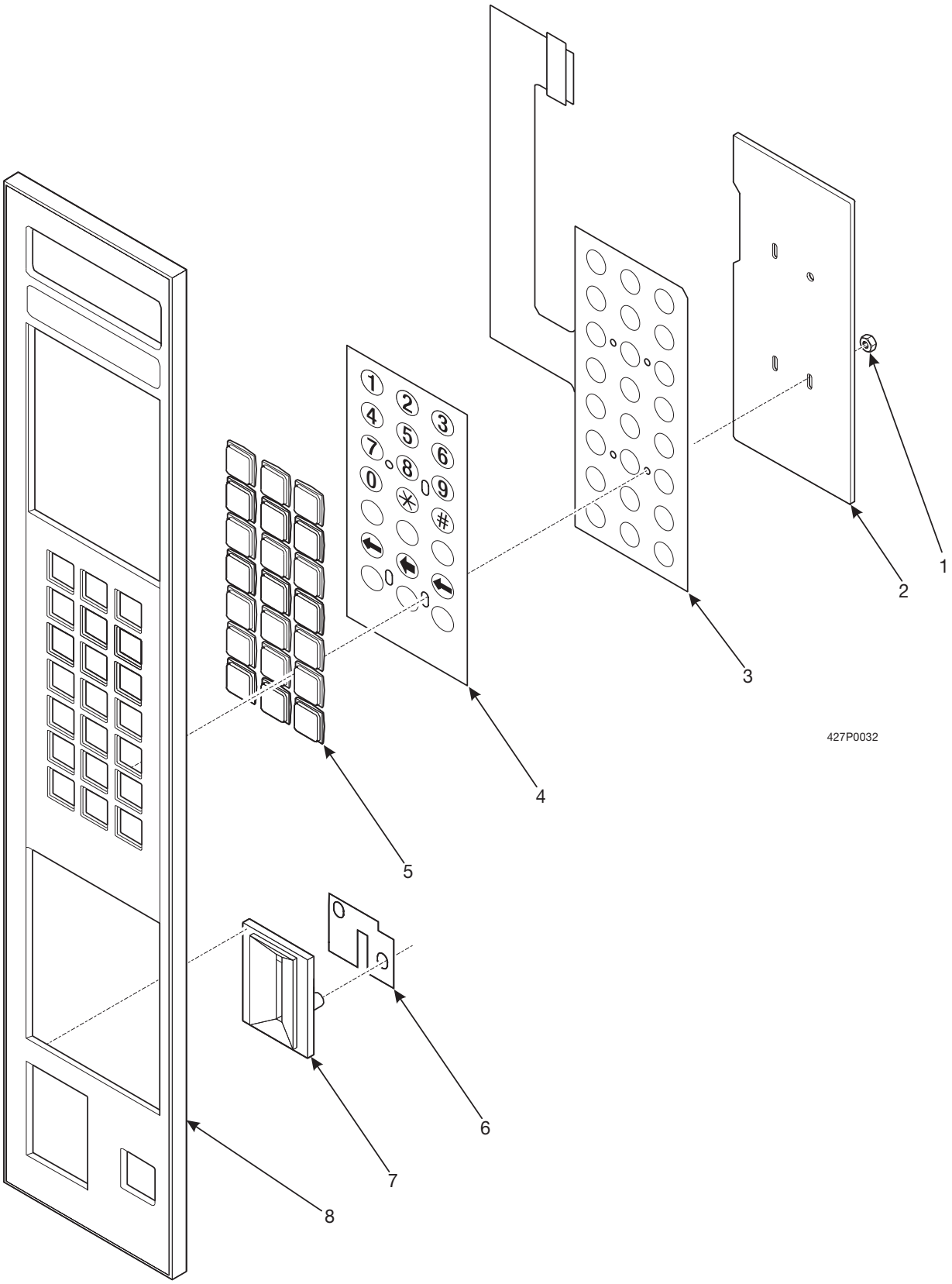

Figure 5. Face Plate Assembly

TABLE 5. FACE PLATE ASSEMBLY

INDEX	PART NUMBER	DESCRIPTION	QTY.
-	4275023	FACE PLATE ASSEMBLY - GPL - (U.S.)	1
	4275024	FACE PLATE ASSEMBLY - GPL - (FR./GER./U.K.)	
	4275025	FACEPLATE ASSEMBLY - POLYVEND	
1	1475089	1/8 NUT - SELF-THREADING	4
2	1575091	PLATE - SELECT SWITCH - BACK UP - W/STUD	1
3	9984621	MEMBRANE SWITCH ASSEMBLY - SELECT	1
4	4270017	LETTER SHEET - SELECT SWITCH	1
5	1472251	LENS - PUSH BUTTON	1
6	1472222	COIN BLOCK (U.S. ONLY)	1
7	1472223	COIN INSERT	1
8	1595013	FRAME - MONETARY PANEL - GPL	1
	4525002	FACEPLATE - MONETARY PANEL - POLYVEND	

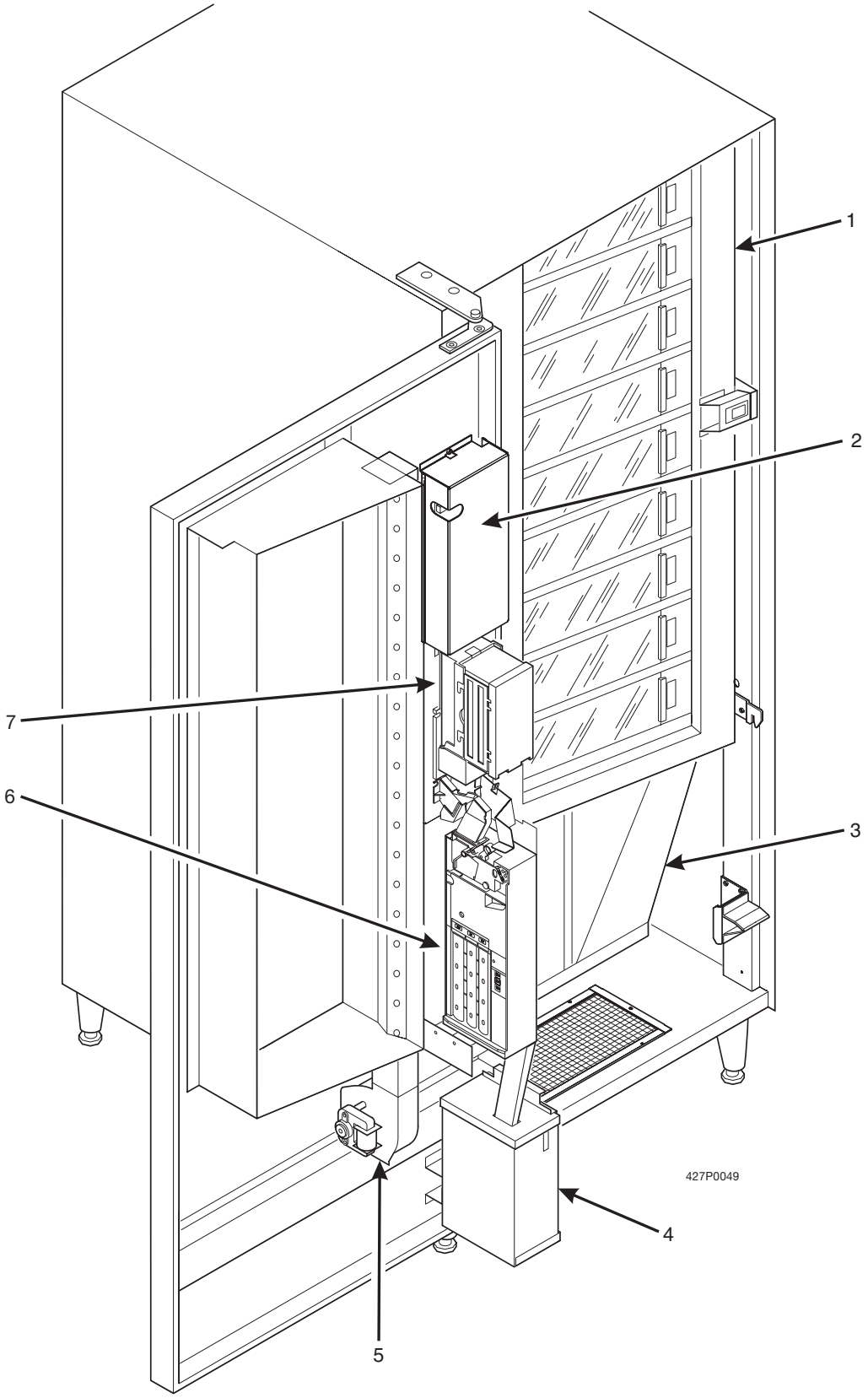

Figure 6. Major Assemblies (Part 1 of 2)

TABLE 6. MAJOR ASSEMBLIES (PART 1 OF 2)

INDEX	PART NUMBER	DESCRIPTION	QTY.
1	4293000	INNER DOOR ASSEMBLY (SEE FIGURE 15)	1
2	4276000	MAIN CONTROL PCB WITH EPROM (SEE FIGURE 10)	1
3	-	REFRIGERATION UNIT (SEE FIGURE 28)	1
4	4271031	MONEY BOX ASSEMBLY (SEE FIGURE 11)	1
5	-	BLOWER AND MOUNTING ASSEMBLY (SEE FIGURE 13)	1
COIN MECHANISM OPTIONS (U.S.)			
6	6400804	MARS TRC6010 - XV	OPT.
	6400805	COINCO 9302-LF	
	2570810	MARS TRC6510 "MDB"	
	2570811	COINCO 9302-GX "MDB"	
	2570812	CONLUX USLZ-001 "MDB"	
	1570993	TRC6510/VN2512 C&V PK "MDB"	
	1570994	USLZ-001/MKA2162 C&V PK "MDB"	
	1570995	9302-GX/BA30 C&V PK "MDB"	
	5900214	MARS - VN4510 - MDB	
	5900217	MARS - VN4010XV - 24V	
	2570814	CONLUX USLX00401F	
	4270851	9302-LF & BA30 "MDB" C&V PKG	
	2570815	CONLUX USLX-001 120V	
BILL VALIDATOR OPTIONS (U.S.)			
7	4270840	NO VALIDATOR - DOMESTIC	OPT.
	4270841	COINCO BA30 "MDB" (VALIDATOR INCLUDED)	
	4270842	COINCO BA30 "MDB" (VALIDATOR NOT INCLUDED)	
	4270843	MARS VN2512-75M "MDB" (VALIDATOR INCLUDED)	
	4270844	MARS VN2512-75M "MDB" (VALIDATOR NOT INCLUDED)	
	4270845	CONLUX MKA2162 "MDB" (VALIDATOR INCLUDED)	
	4270846	CONLUX MKA2162 "MDB" (VALIDATOR NOT INCLUDED)	
	4270852	COINCO BA32SA "MDB" (VALIDATOR INCLUDED)	
	4270853	COINCO BA32SA "MDB" (VALIDATOR NOT INCLUDED)	
	5900247	VALIDATOR - MARS - AE2612 - U5M - MDB	

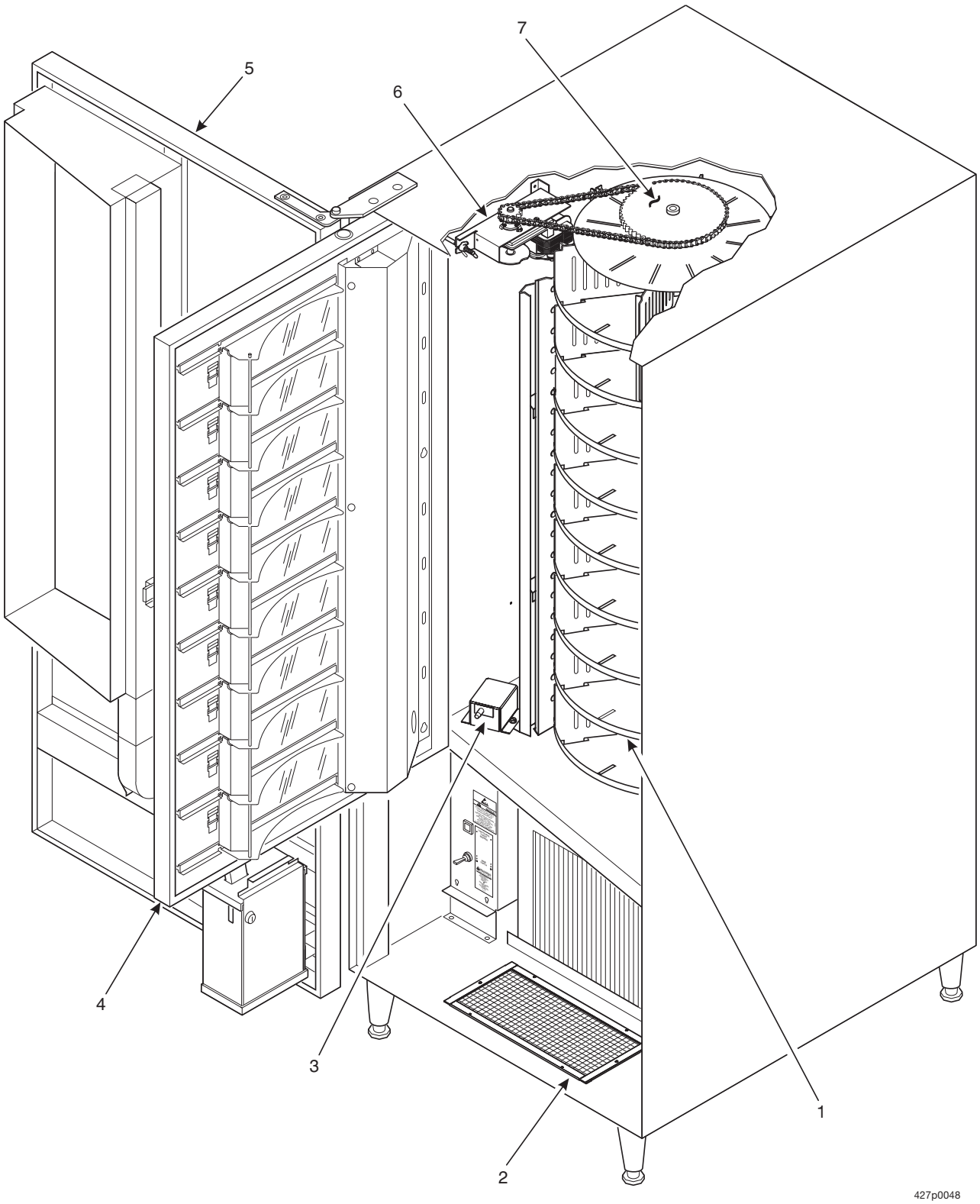

Figure 7. Major Assemblies (Part 2 of 2)

TABLE 7. MAJOR ASSEMBLIES (PART 2 OF 2)

	PART NUMBER	DESCRIPTION	
1	4277000	TURRET ASSEMBLY (SEE FIGURE 21)	1
2	4271066	SCREEN ASSEMBLY	1
3	-	SWITCH AND MOUNTING BRACKET ASSEMBLY (SEE FIGURE 20)	1
4	4293000	INNER DOOR ASSEMBLY (SEE FIGURE 15)	1
5	4292000	DOOR ASSEMBLY - COMMON (SEE FIGURE 2)	1
	4292008	DOOR ASSEMBLY - COMMON - GENERATION (SEE FIGURE 2)	
6	-	TURRET MOTOR ASSEMBLY - 115 V (SEE FIGURE 27)	1
		TURRET MOTOR ASSEMBLY - 230 V (SEE FIGURE 27)	
7	4277059	COLUMN ASSEMBLY - BLACK (SEE FIGURE 21)	1

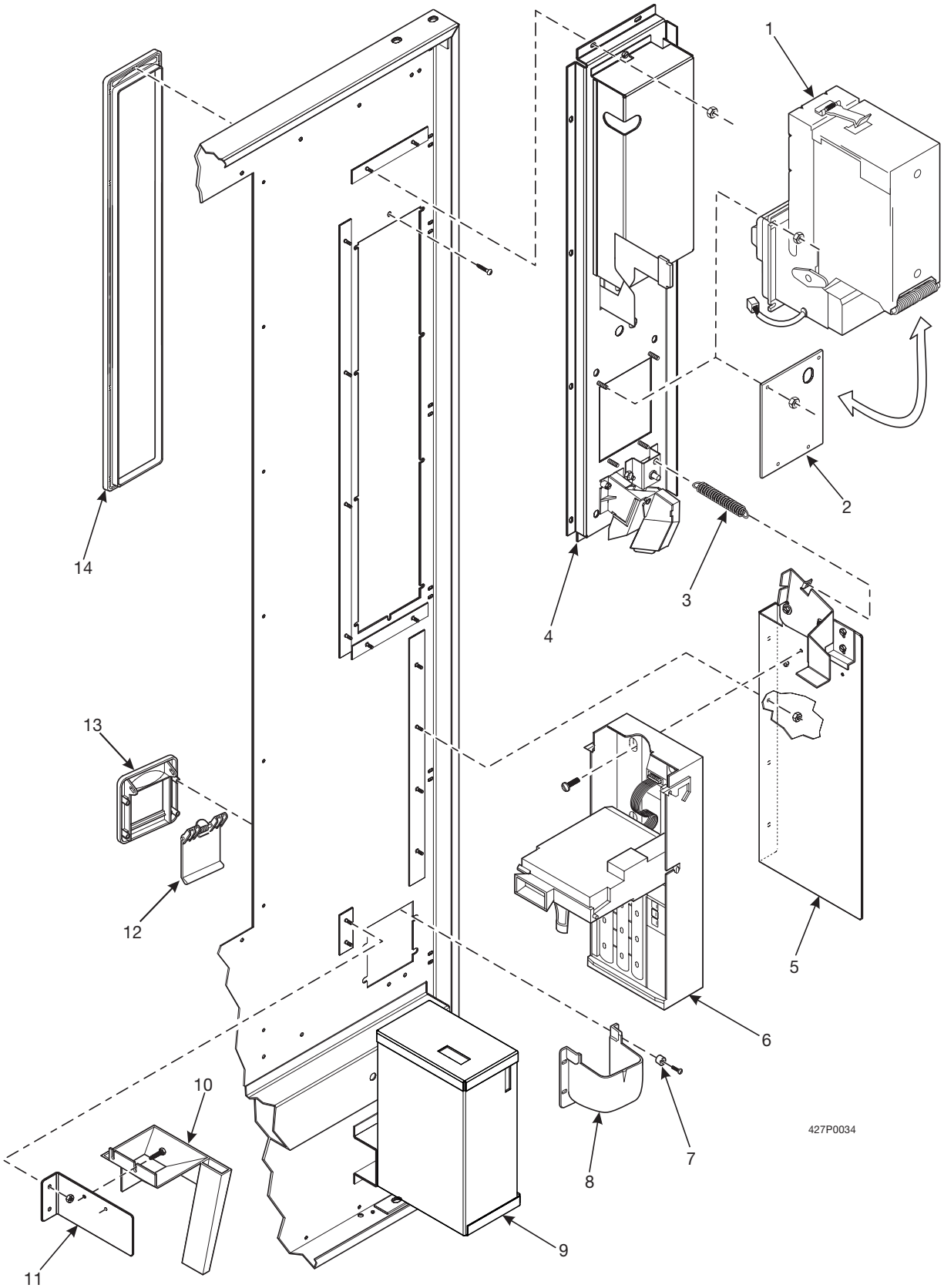

Figure 8. Outer Door Interior

TABLE 8. OUTER DOOR INTERIOR

INDEX	PART NUMBER	DESCRIPTION	QTY.
1	-	BILL VALIDATOR (SEE TABLE 6)	OPT.
2	1575048	PLATE - INSERT BACKING	OPT.
3	1127808	SPRING - SHELF RESET	1
4	-	MONETARY ASSEMBLY (SEE FIGURE 10)	1
5	4275002	MOUNTING - CHANGER	1
6	-	COIN MECHANISM (SEE FIGURE 6)	OPT.
7	2302053	SPACER - CUP	4
8	1572010	CUP - COIN RETURN	1
9	-	MONEY BOX AND HOUSING ASSEMBLY (SEE FIGURE 11)	1
10	6231242	CHUTE - PAYOUT	1
11	4275001	MOUNT - PAYOUT CHUTE	1
12	4245082	GATE - COIN RETURN	1
	4245083	SPRING - COIN RETURN DOOR	1
	4245084	SHAFT - DOOR - COIN RETURN	1
13	1572011	TRIM - COIN CUP - BLACK	1
14	1575047	CASTING - MONETARY FRAME - BLACK	1

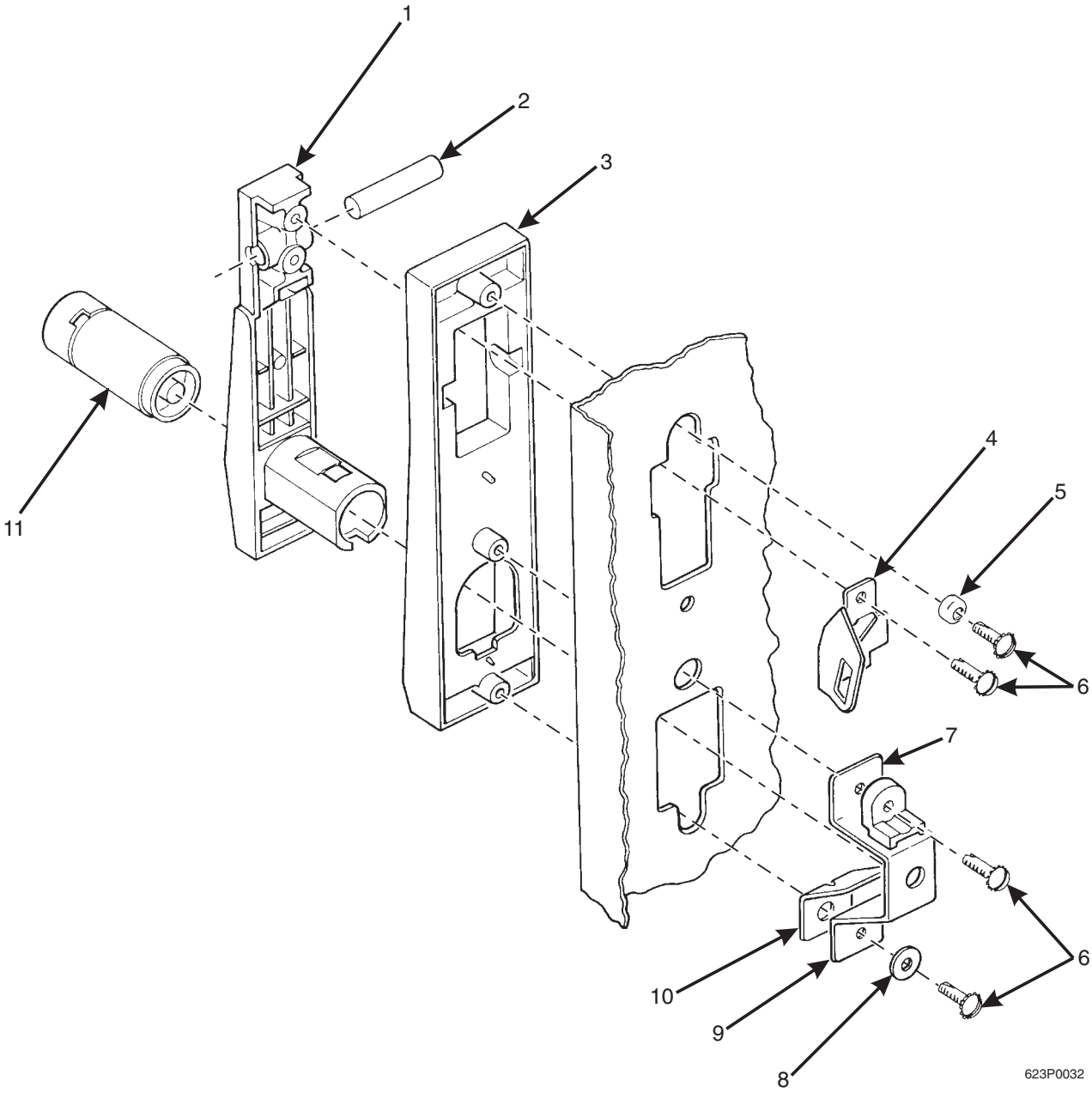

Figure 9. Door Lock and Handle Assembly

TABLE 9. DOOR LOCK AND HANDLE ASSEMBLY

INDEX	PART NUMBER	DESCRIPTION	QTY.
1	1172190	LEVER - LOCK	1
2	1302291	PIVOT - LEVER LOCK	1
3	1172191	BASE - LEVER LOCK	1
4	2272052	ACTUATOR ASSEMBLY - LOCK BAR	1
5	1302289	CUP SPACER	2
6	1217161	SCREW, #10-32 X 1/2 RHS W/LW	5
7	1302326	SHIELD - LATCH	1
8	9900121	WASHER - STEEL - 7/16 X .203 X .032	1
9	1302324	CATCH - DOOR LATCH	1
10	1302290	LATCH - LOCK LOWER	1
11	9992400	CYLINDER - LOCK	OPT.
	3112163	VAN LOCK	
-	3112164	KEY (NOT SHOWN)	OPT.
		VAN LOCK APPLICATION (NOT SHOWN)	

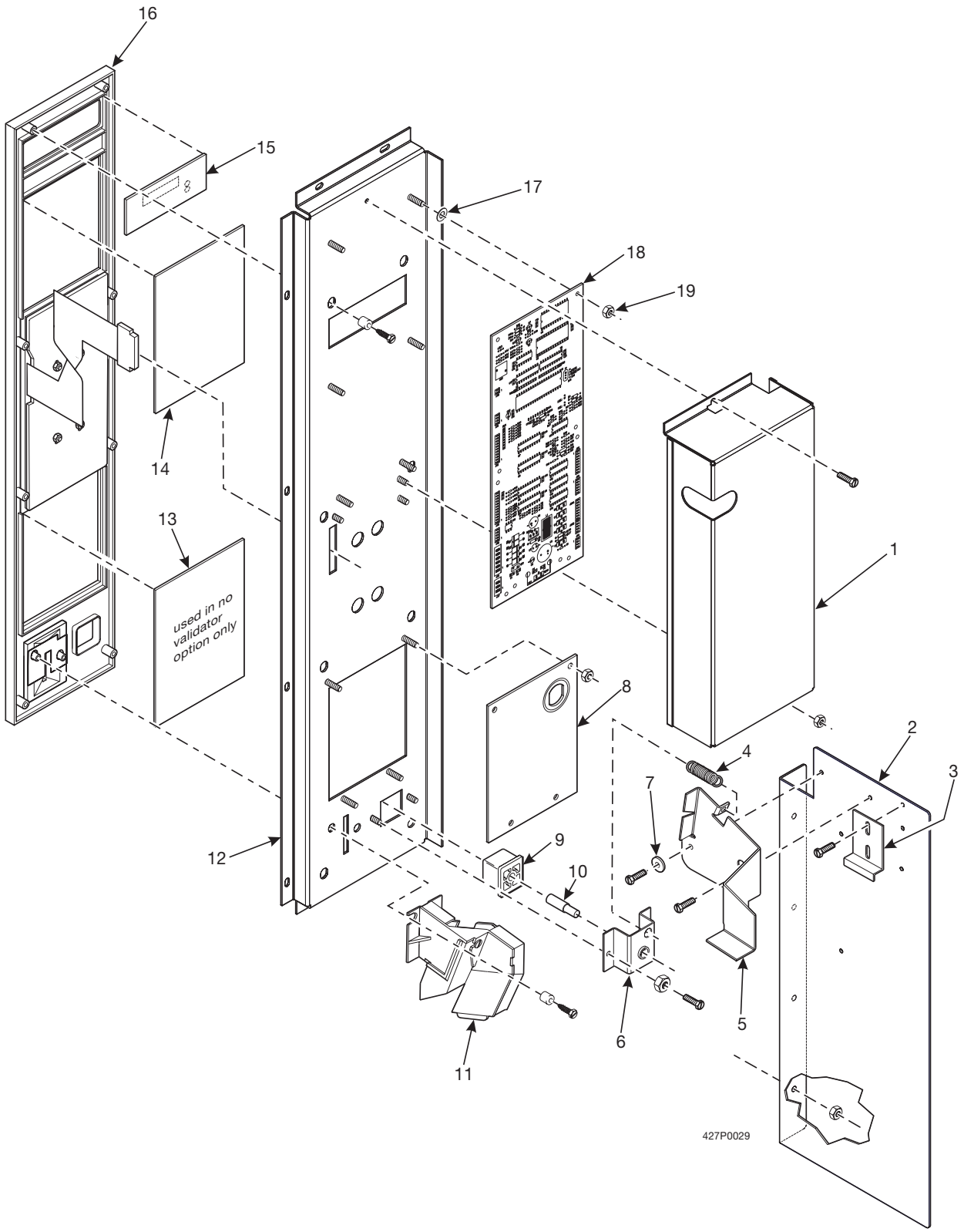

Figure 10. Monetary Assembly

TABLE 10. MONETARY ASSEMBLY

NDEX	PART NUMBER	DESCRIPTION	QTY.
1	4272066	COVER - CONTROL/INTERFACE PCB	1
2	4275002	MOUNTING - CHANGER	1
3	6231037	CLAMP - CABLE	1
4	1127808	SPRING - SHELF RESET	1
5	1571113	ARM - SCAVENGER	2
6	1571079	BRACKET - COIN RETURN BUTTON	5
7	2204093	WASHER - SCAVENGER BAR	1
8	1575048	PLATE - INSERT BACKING	1
9	1475026	BUTTON - COIN RETURN	1
10	1475072	SHAFT - RETURN BUTTON	1
11	1575003	COIN CHUTE ASSEMBLY	1
12	4275022	PLATE ASSEMBLY - MONETARY	1
13	1575035	INSERT - INSTRUCTIONS - LOWER (U.K./U.S.)	1
	1672027	INSERT - INSTRUCTIONS - LOWER - EUROCOIN	
14	4275006	INSERT - INSTRUCTIONS (U.K./U.S.)	1
	4275011	INSERT - INSTRUCTIONS (FR.)	
	4275012	INSERT - INSTRUCTIONS (GER.)	
15	4272003	LENS - DISPLAY (U.K./U.S.)	1
	4275080	LENS - DISPLAY (FR.)	
	4272081	LENS - DISPLAY (GER.)	
16	-	FACE PLATE ASSEMBLY (SEE FIGURE 5)	1
17	5305318	WASHER - .257 X .50 X .062	6
18	4276000	MAIN CONTROL PCB WITH EPROM	1
19	9900081	NUT - #8-32 KEPS ZINC PLATE	1

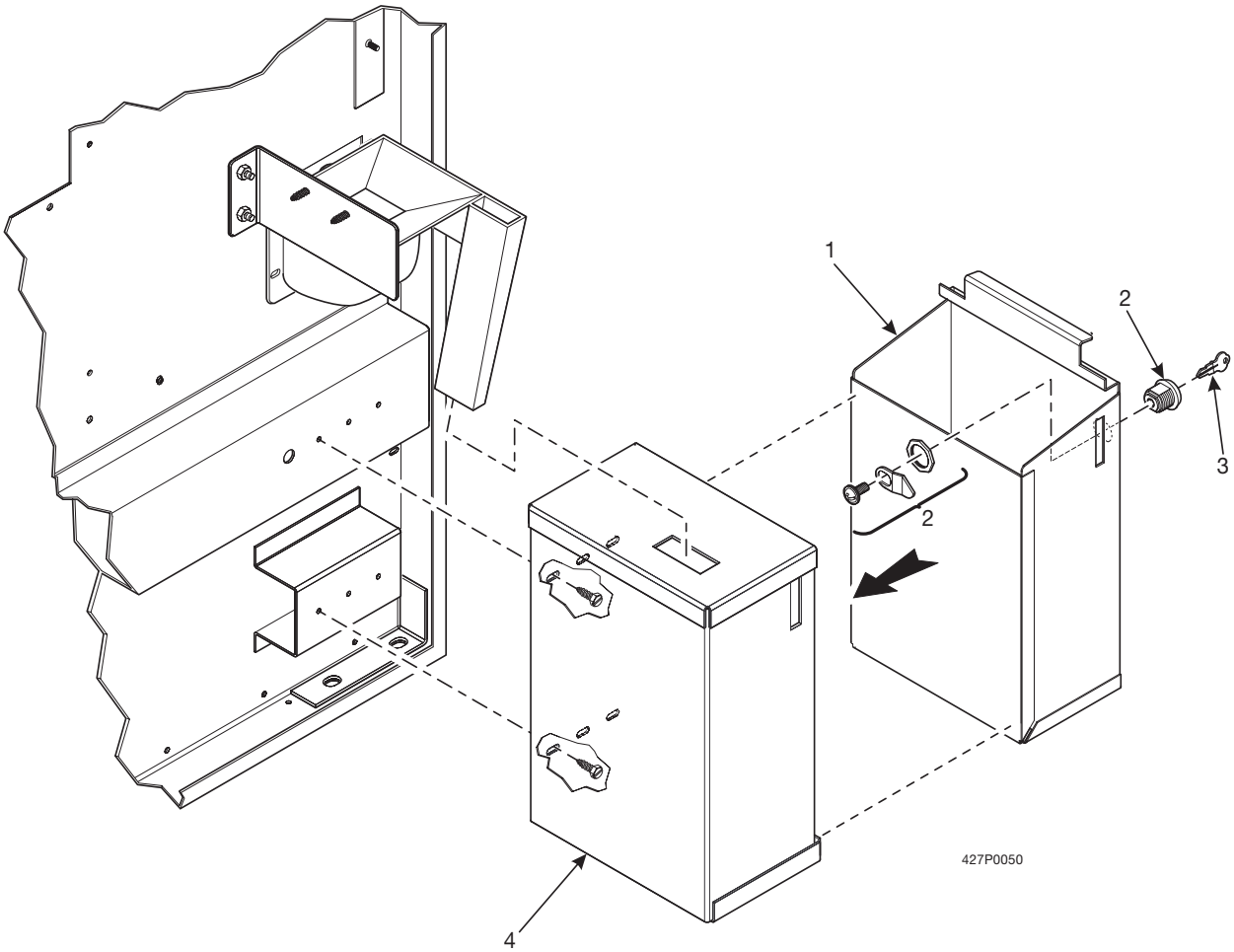

Figure 11. Money Box and Housing Assembly

TABLE 11. MONEY BOX AND HOUSING ASSEMBLY

INDEX	PART NUMBER	DESCRIPTION	QTY.
1	4271031	MONEY BOX ASSEMBLY	1
2	4520864	MONEY BOX LOCK	1
3	4521035	KEY - MSU - 48, #352-48	1
4	4275005	COIN BOX HOUSING ASSEMBLY	1

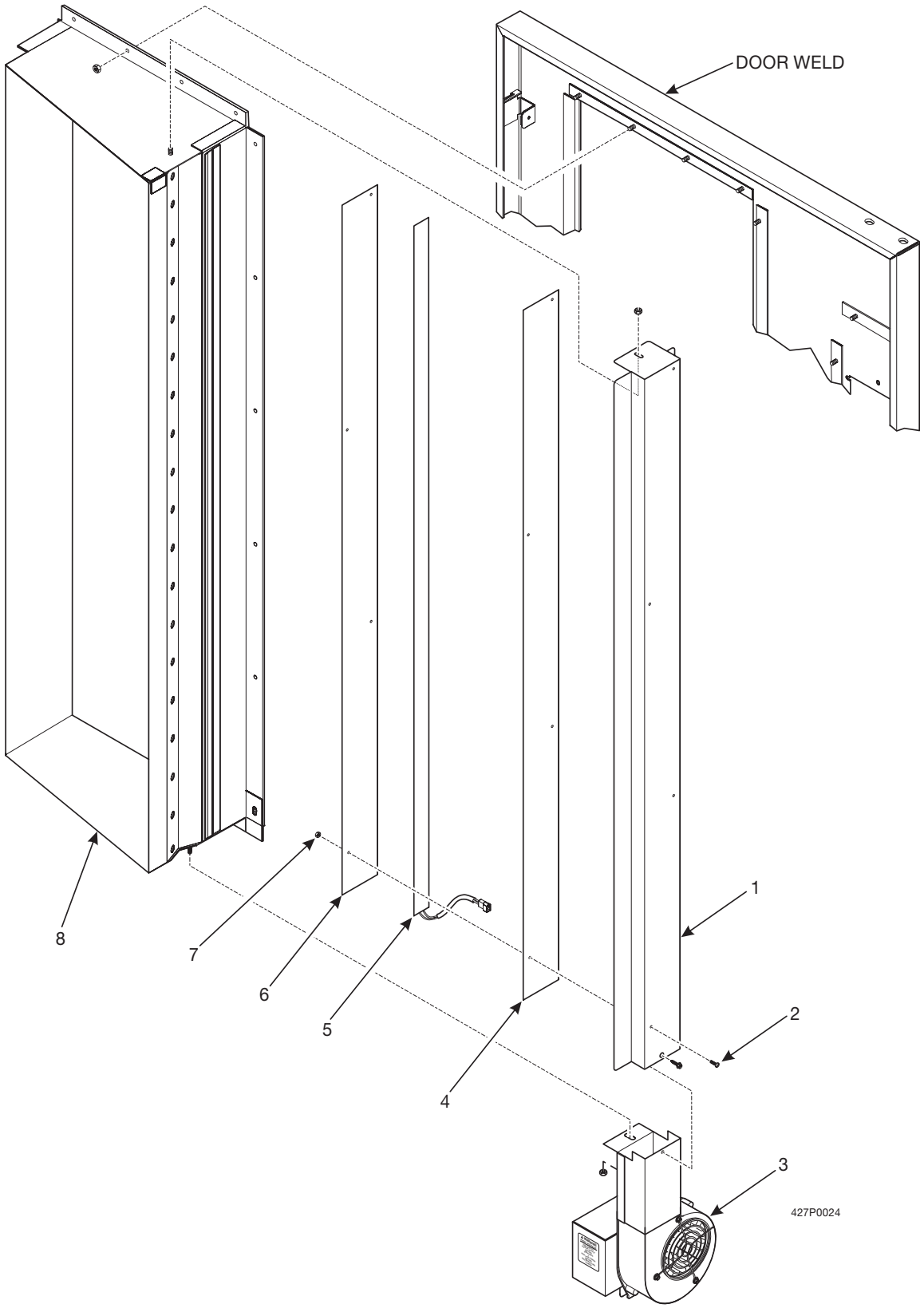

Figure 12. Shadow Box and Blower Assembly

TABLE 12. SHADOW BOX AND BLOWER ASSEMBLY

INDEX	PART NUMBER	DESCRIPTION	QTY.
-	4272057	AIR CHUTE ASSEMBLY - 115V (U.S.)	1
	4272078	AIR CHUTE ASSEMBLY - 230V (FR./GER./U.K.)	
1	4272061	CHUTE - AIR - SHADOW BOX	1
2	6106341	SCREW - #4 40 X 3/8 RHS	-
3	4272058	BLOWER & MOUNTING ASSEMBLY (U.S.) (SEE FIGURE 13)	1
	4272079	BLOWER & MOUNTING ASSEMBLY - 230V (FR./GER./U.K.) (SEE FIGURE 13)	
4	4272059	CORK - DOUBLE COATED	3
5	4272052	HEATER - 115V - 125W (U.S.)	1
	4272053	HEATER - 230V- 125W (FR./GER./U.K.)	
6	4272015	HEAT SINK	1
7	1217159	NUT - 4-40 KEPS W/EXT L/WAS H ZP	-
8	4292001	WELD ASSEMBLY - SHADOW BOX	1

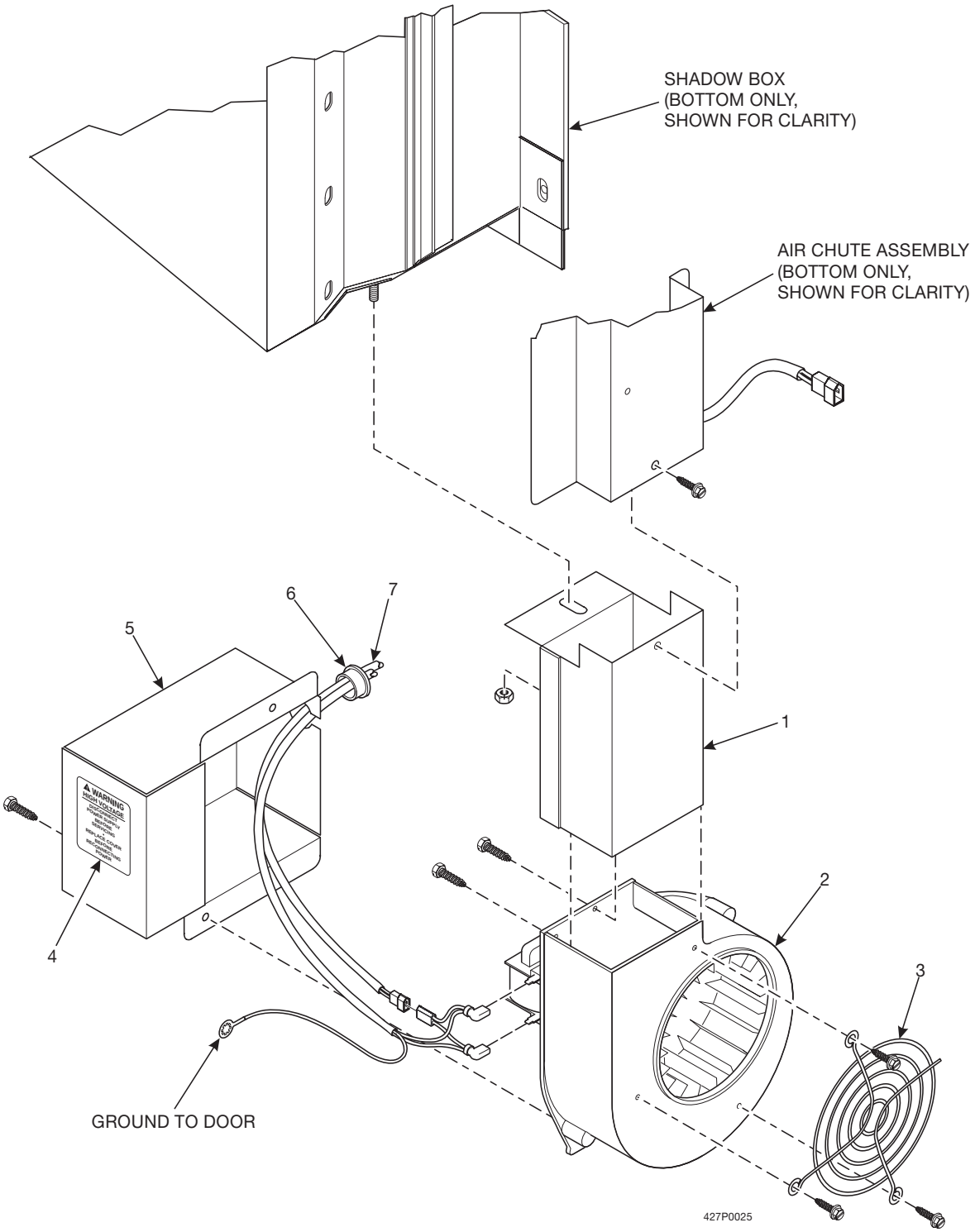

Figure 13. Blower Assembly

TABLE 13. BLOWER ASSEMBLY

	PART NUMBER	DESCRIPTION	
-	4272058	BLOWER AND MOUNTING ASSEMBLY (U.S.)	1
	4272079	BLOWER AND MOUNTING ASSEMBLY - 230V (FR./GER./U.K.)	
1	4272083	BLOWER MOUNT ASSEMBLY	1
2	4302556	BLOWER ASSEMBLY - 115V (U.S.)	1
	4312051	BLOWER ASSEMBLY - 230V (FR./GER./U.K.)	
3	4272002	GUARD - BLOWER FAN	1
4	6231189	LABEL - WARNING - HIGH VOLTAGE (U.K./U.S.)	1
	6231229	LABEL - WARNING - HIGH VOLTAGE (FR.)	
	6231216	LABEL - WARNING - HIGH VOLTAGE (GER.)	
5	4271098	COVER - MOTOR	1
6	4271057	BUSHING - 1.0" - OPEN/CLOSED	1
7	4279014	HARNESS - DOOR FAN	1

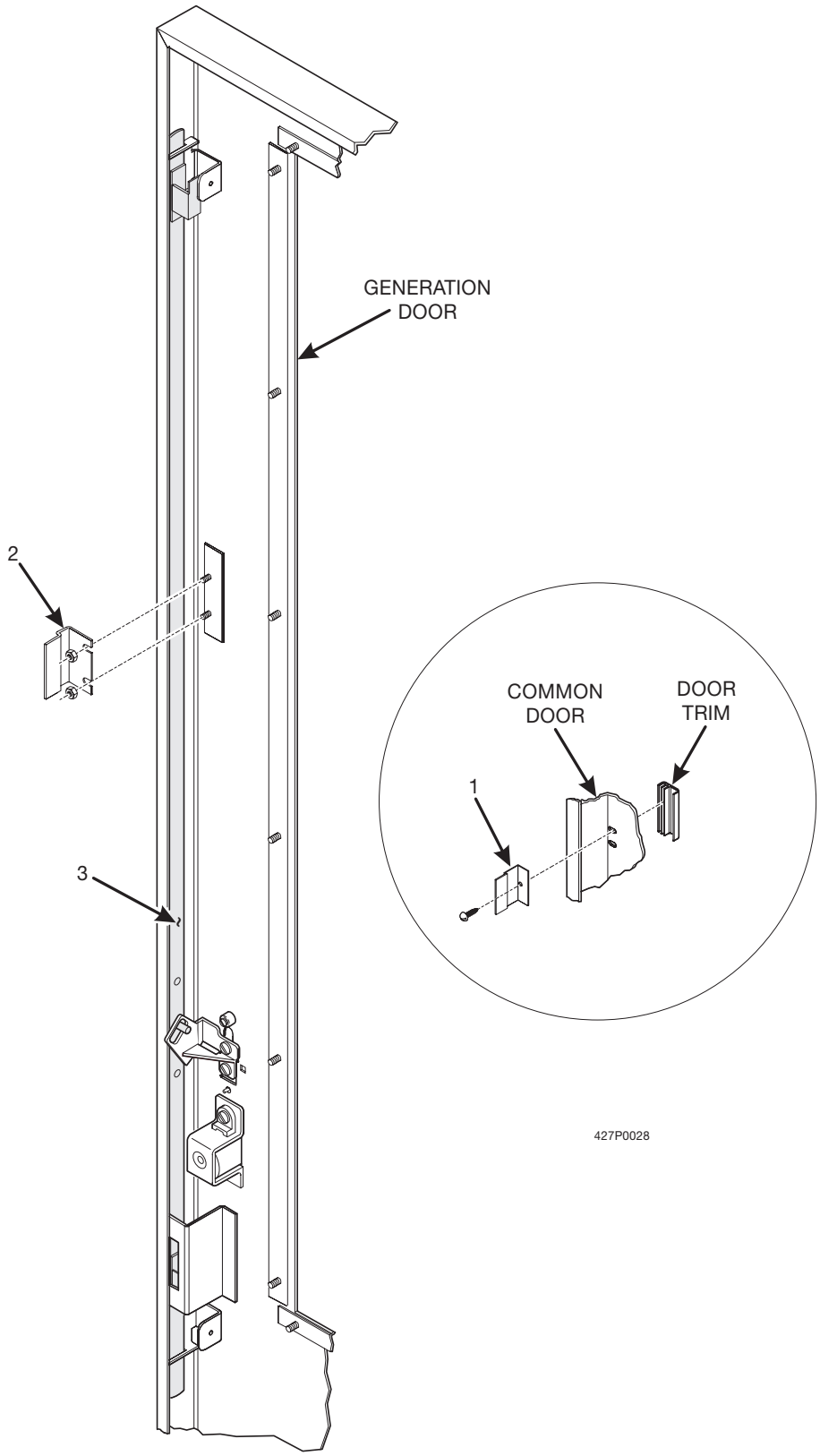

Figure 14. Lock Bar Assembly

TABLE 14. LOCK BAR ASSEMBLY

INDEX	PART NUMBER	DESCRIPTION	QTY.
1	1472250	GUIDE - LOCK BAR (COMMON DOOR ONLY)	1
2	4272065	GUIDE - LOCK BAR (GENERATION DOOR ONLY)	1
3	1472179	LATCH & LOCK BAR ASSEMBLY	1

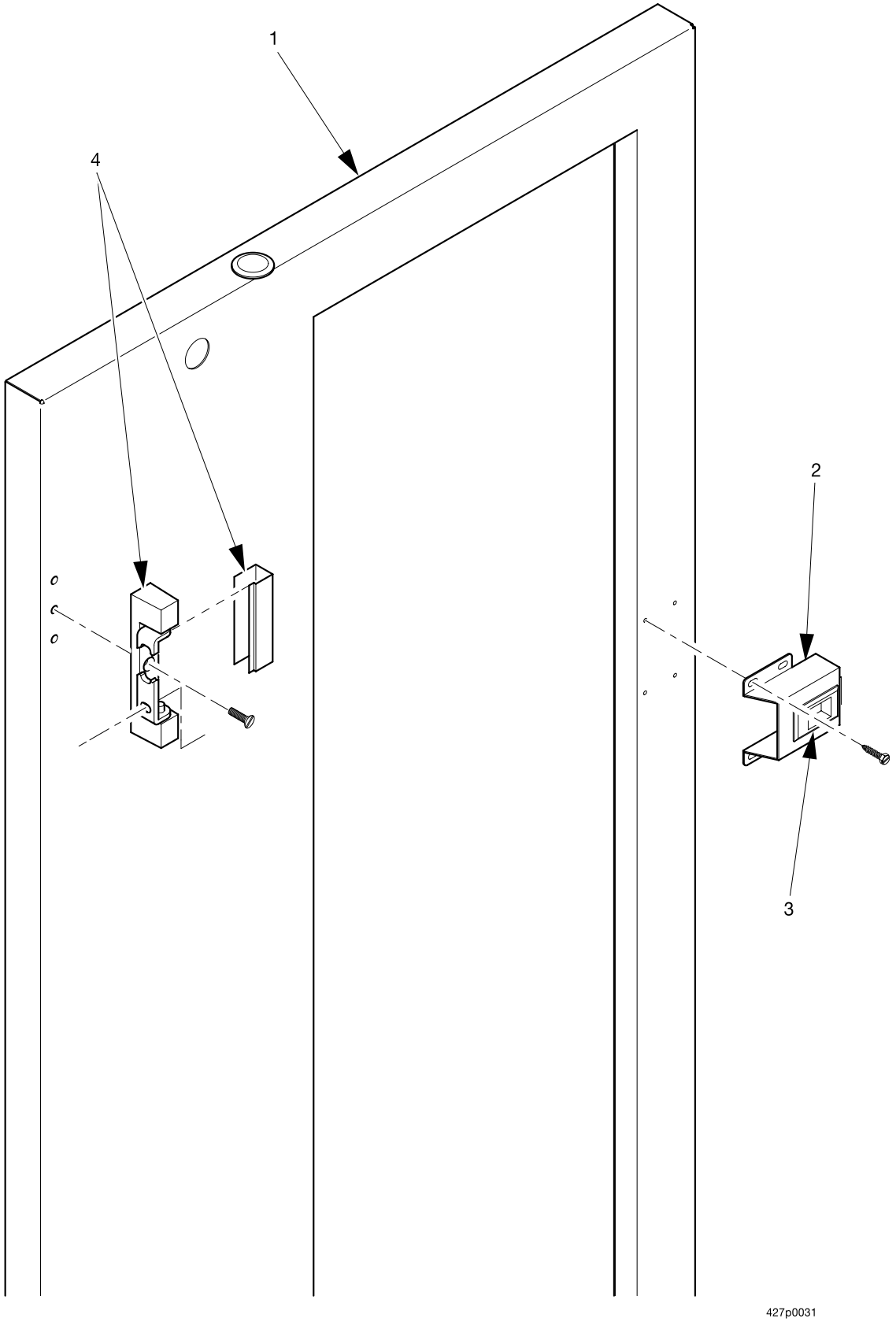

Figure 15. Inner Door Exterior

TABLE 15. INNER DOOR EXTERIOR

INDEX	PART NUMBER	DESCRIPTION	QTY.
1	4293001	INNER DOOR ASSEMBLY - FOAMED	1
2	4273081	BRACKET - LATCH MOUNTING	1
3	4273039	LATCH - COLD FOOD DOOR	1
4	4273006	HINGE - INNER DOOR	2

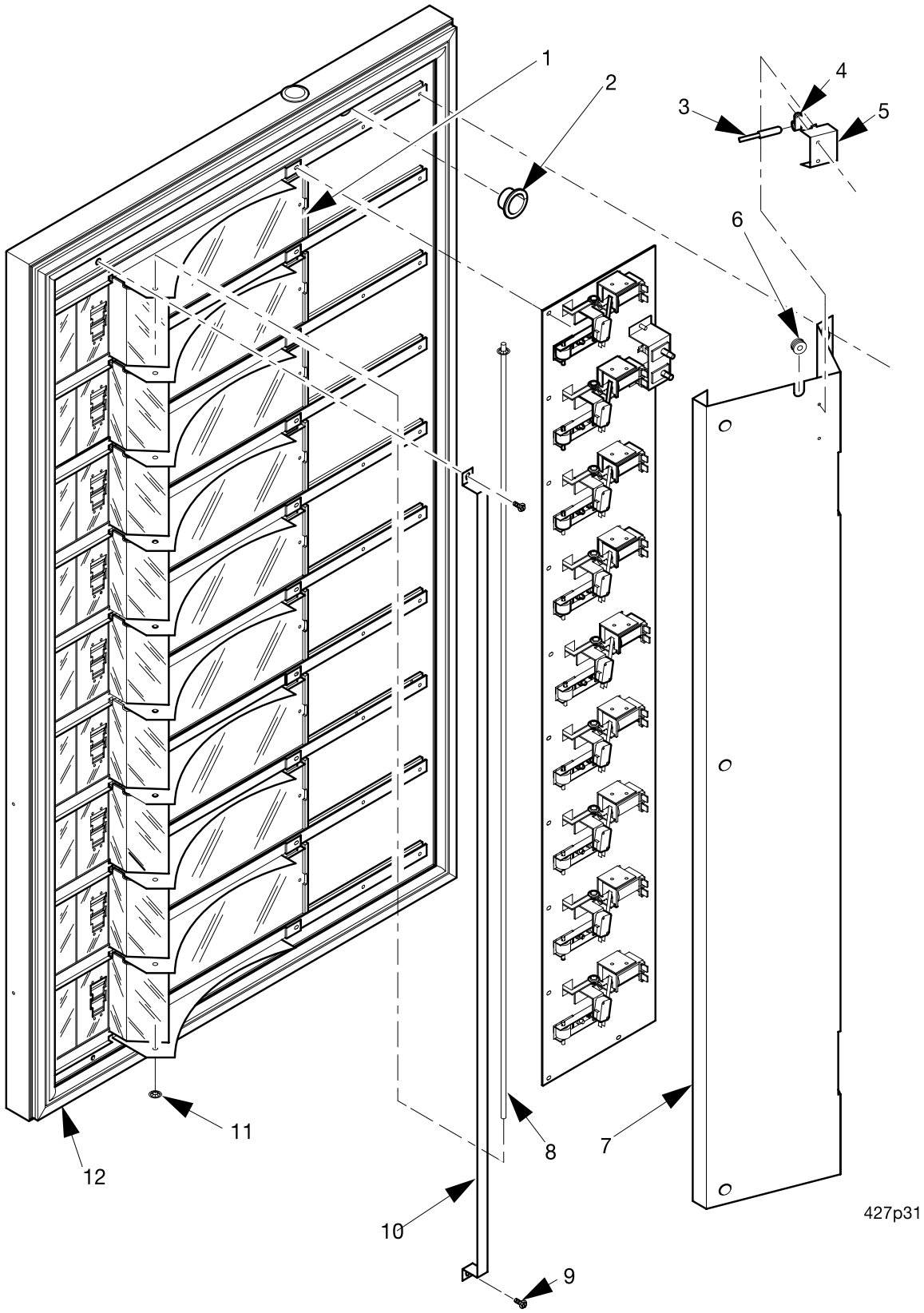

Figure 16. Inner Door Interior

TABLE 16. INNER DOOR INTERIOR

INDEX	PART NUMBER	DESCRIPTION	QTY.
1	4312124	TAPE - FLOCKED - .25” WIDE	A/R
2	4271057	BUSHING - 1.0" - OPEN/CLOSED	2
3	9987852	PROBE - TEMPERATURE SENSOR	1
4	1452139	RETAINER - HARNESS	1
5	4272093	COVER ASSEMBLY - SENSOR	1
6	3502097	BUSHING # OCB-500	1
7	4273117	COVER - SOLENOID - INNER DOOR	1
8	4273044	TAB, LOCK - HOLDER PLATE	1
9	1451097	SCREW - #8-32 X .31 HEX HD. T/F - BLACK	2
10	4293014	STOP - DOOR - REINFORCEMENT	1
11	5201266	PUSH ON RETAINER .187	2
12	4311211	GASKET - FOAM - 1/8 X 1/2	44”

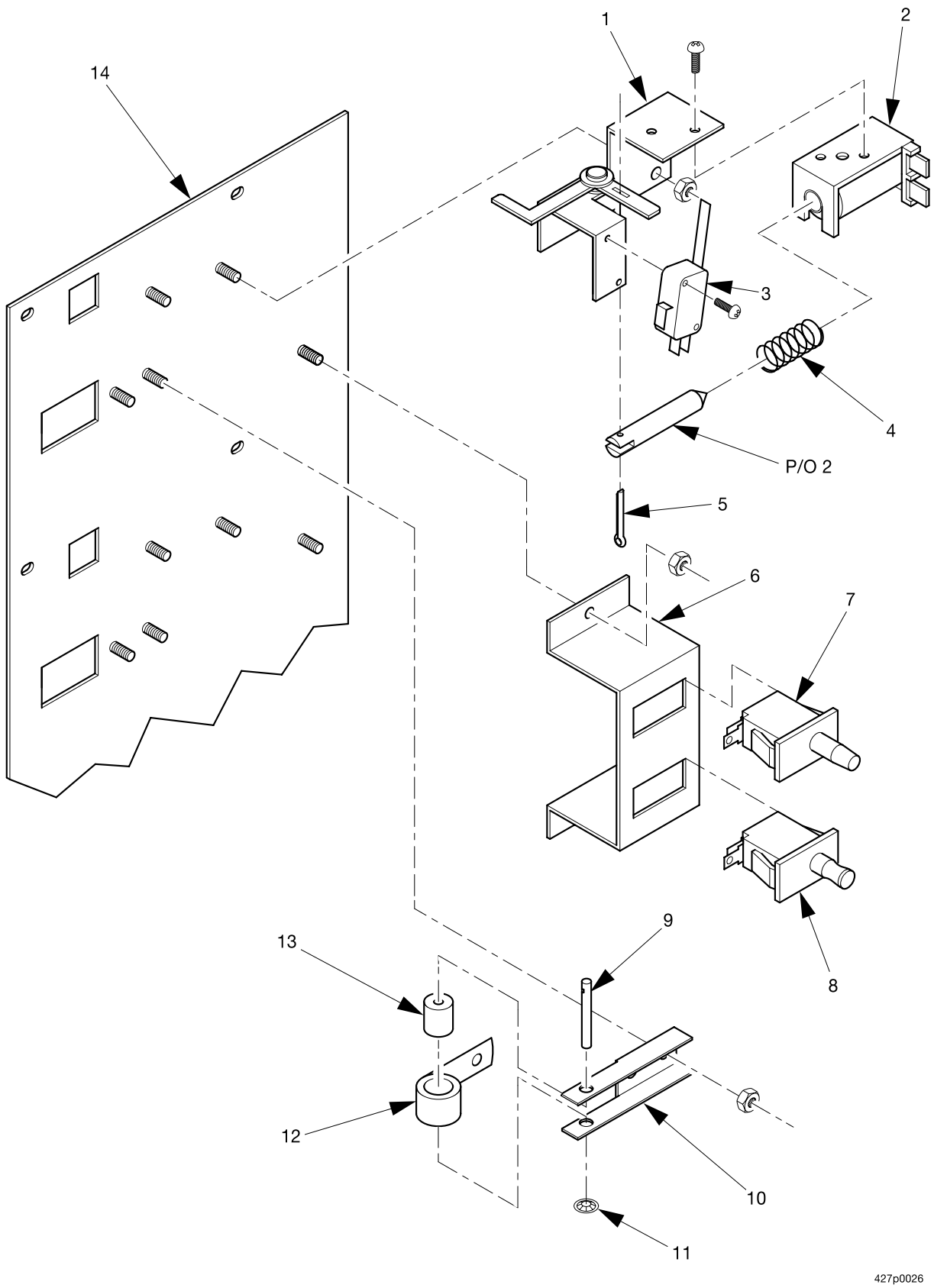

Figure 17. Vend Door Solenoid Assembly

TABLE 17. VEND DOOR SOLENOID ASSEMBLY

INDEX	PART NUMBER	DESCRIPTION	QTY.
-	4273090X	SOLENOID & BRACKET ASSEMBLY (INCLUDES INDEX NUMBERS 1 THROUGH 5)	9
1	4273088	BRACKET ASSEMBLY - SOLENOID MOUNTING	1
2	4252029	SOLENOID - 24 VDC	1
3	9984633	SWITCH - LEVER - 1 7/8	1
4	4273019	SPRING	1
5	9900140	COTTER PIN 1/16 X 7/16	1
6	4273079	BRACKET - SWITCH MOUNTING	1
7	1236050	SWITCH - INTERLOCK	1
8	1401110	SWITCH	1
-	4273084	ROLLER SPRING ASSEMBLY (INCLUDES INDEX NUMBERS 9 THROUGH 13)	9
9	4273094	SPRING - ROLLER SHAFT	1
10	4293016	BRACKET - SPRING MOUNT	1
11	4273050	STUD - PUSHNUT	1
12	4273007	SPRING - CONSTANT FORCE	1
13	4273004	ROLLER - SPRING	1
14	4273089	PLATE - SOLENOID MOUNTING	1

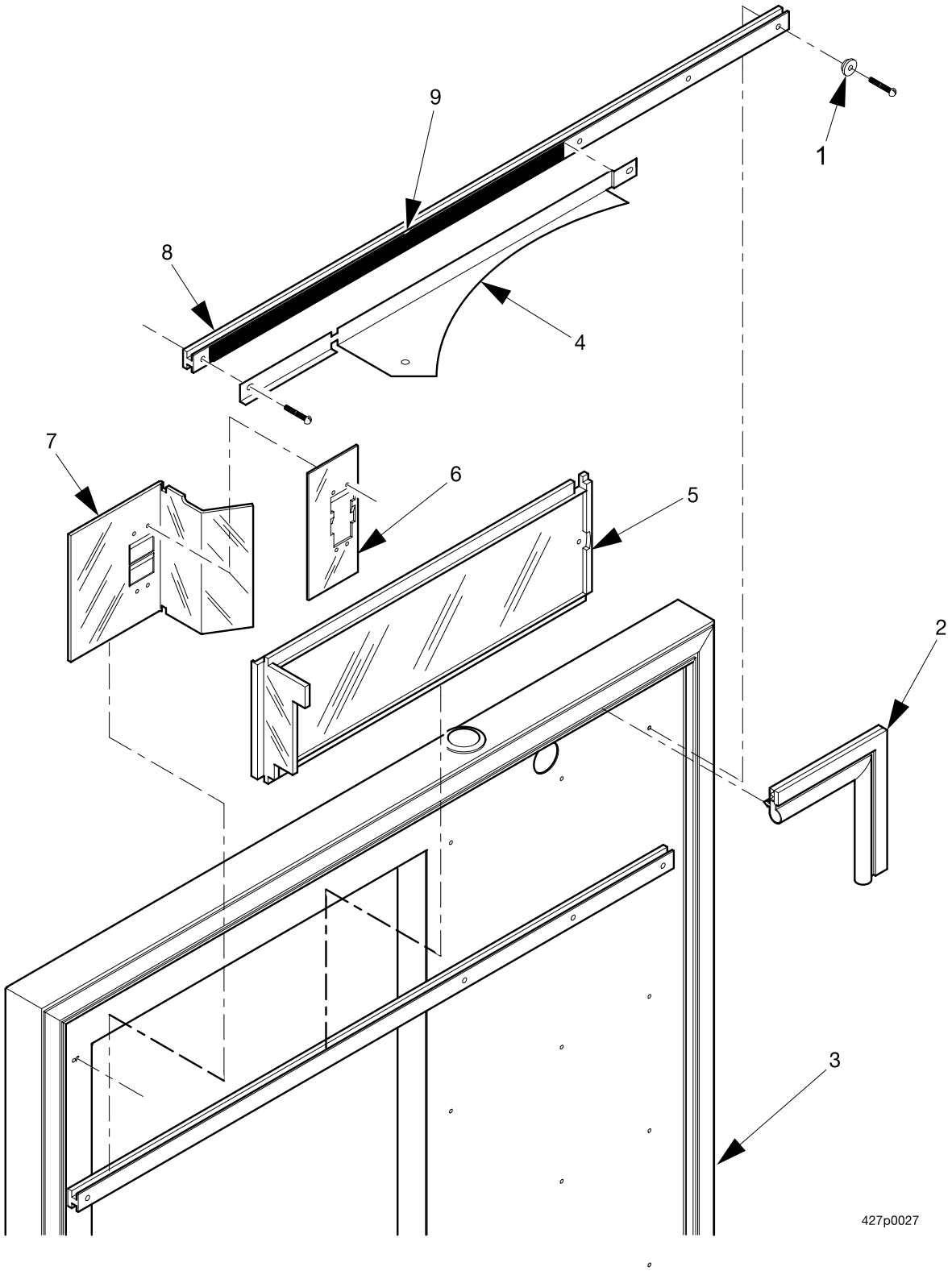

Figure 18. Vend Door

TABLE 18. VEND DOOR

INDEX	PART NUMBER	DESCRIPTION	QTY.
1	4273021	INNER GUARD BUSHING	6
2	4273112	DOOR GASKET - FOODKING	1
3	4293001	INNER DOOR ASSEMBLY - FOAMED	1
4	4363008	SHIELD - TRAY - BLACK	10
5	4273114	VEND DOOR	9
6	4273023	PRICE TAG RETAINER	9
7	4273115	DOOR STOP & PRICE HOLDER	9
8	4273108	TRACK - DOOR - VEND	10
9	4273049	KOREL TAPE	25 FT

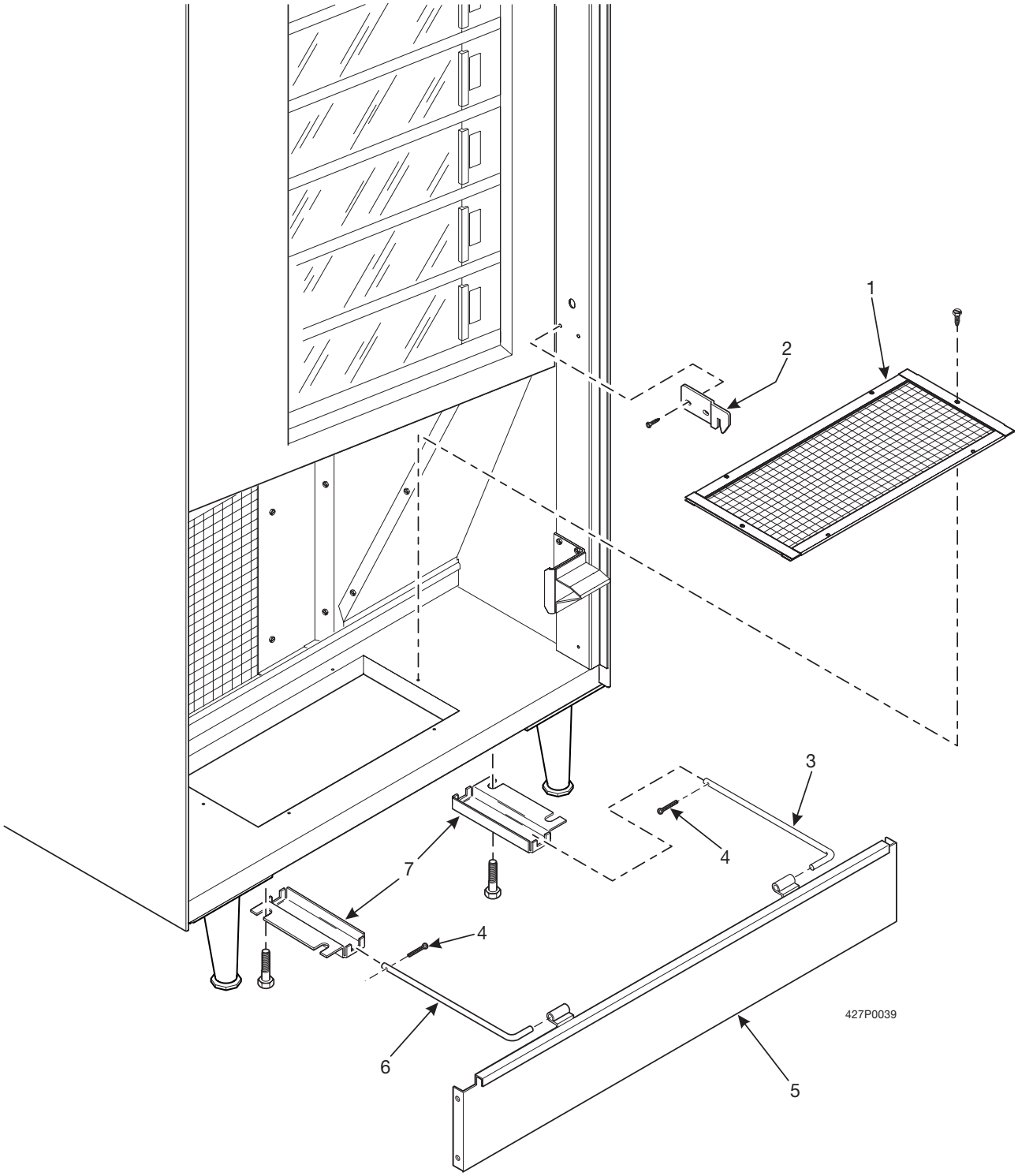

Figure 19. Base Plate Accessory and Miscellaneous Cabinet Parts

TABLE 19. BASE PLATE ACCESSORY AND MISCELLANEOUS CABINET PARTS

INDEX	PART NUMBER	DESCRIPTION	QTY.
1	4271066	SCREEN ASSEMBLY	1
2	1571074	LOCK ARM - CABINET	1
-	4271105	BASE PLATE AND ACCESSORY ASSEMBLY (INCLUDES INDEX NUMBERS 3 THROUGH 7)	OPT.
3	1411194	SLIDE - BASE PLATE - RIGHT HAND	1
4	9900098	COTTER PIN - 3/32 X 3/4 IN	2
5	4271103	BASE PLATE ASSEMBLY	1
6	1411195	SLIDE - BASE PLATE - LEFT HAND	1
7	6231087	BRACKET - BASE PLATE	2

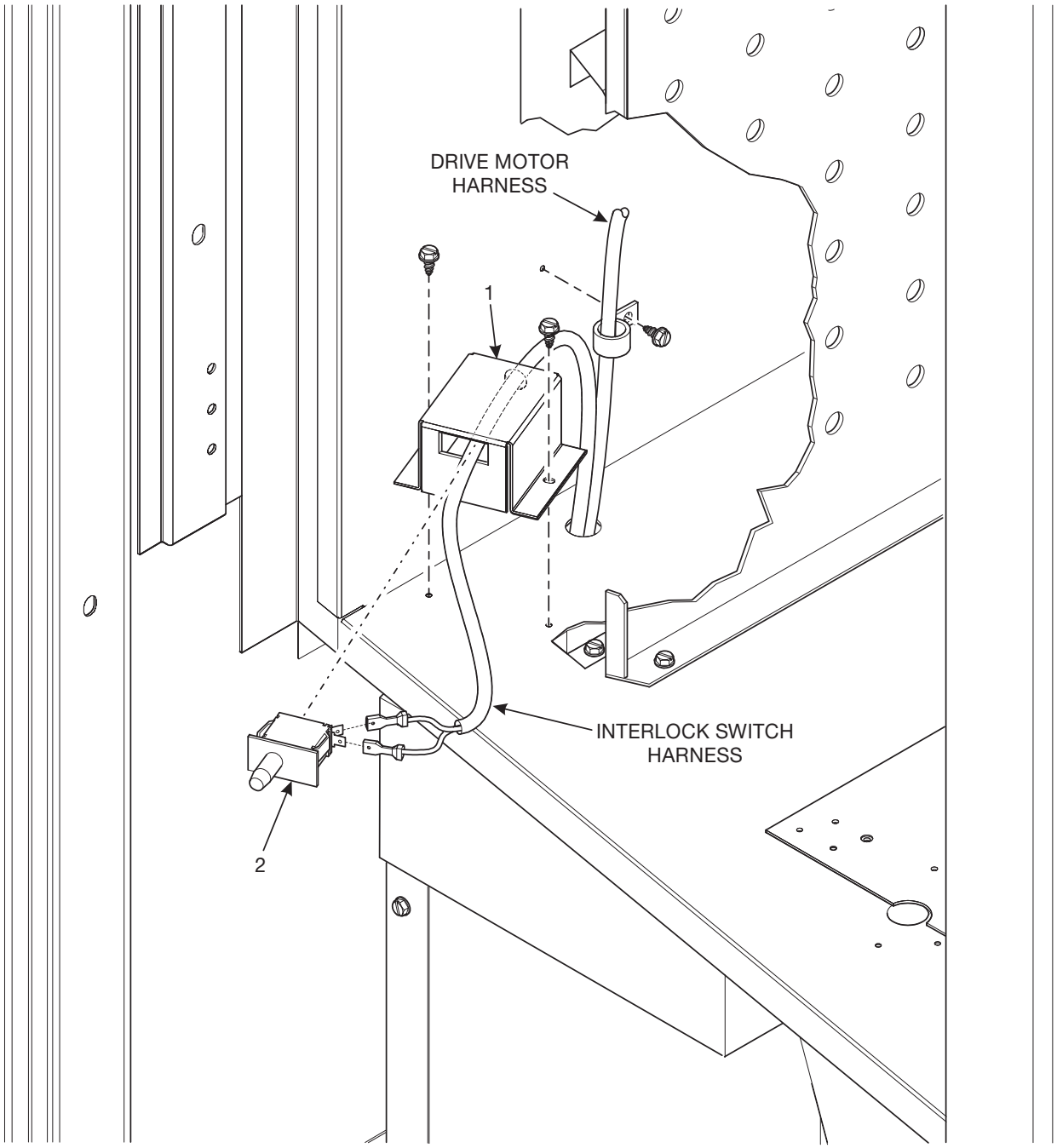

Figure 20. Switch and Mounting Bracket Assembly

TABLE 20. SWITCH AND MOUNTING BRACKET ASSEMBLY

INDEX	PART NUMBER	DESCRIPTION	QTY.
1	4271092	BRACKET - SWITCH MOUNTING - BLACK	1
2	4271109	SWITCH - PANEL MOUNT	1

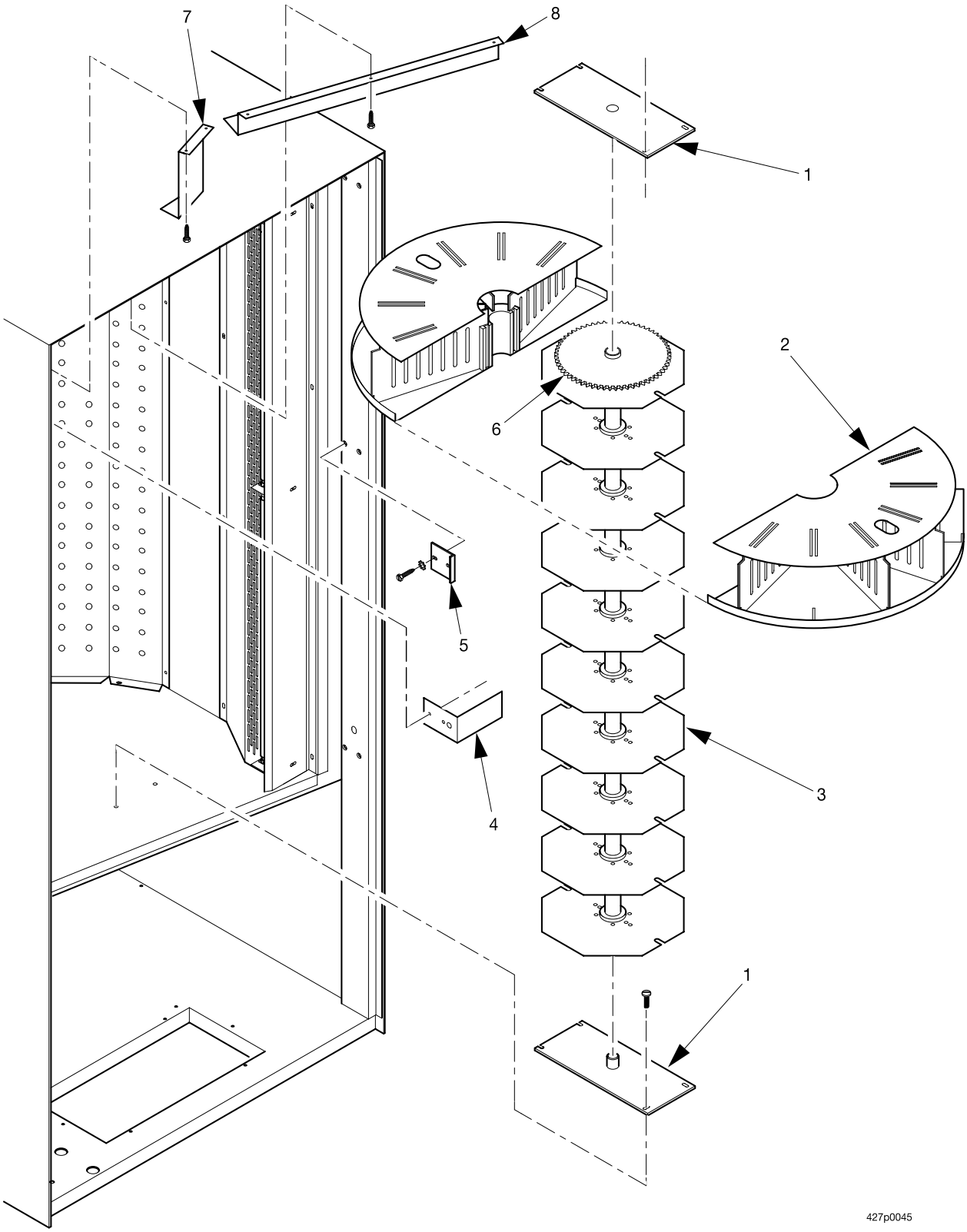

Figure 21. Turret Assembly

TABLE 21. TURRET ASSEMBLY

INDEX	PART NUMBER	DESCRIPTION	QTY.
1	4277055	BASEPLATE WELD ASSEMBLY - BLACK	2
2	-	TRAY HALF ASSEMBLY (SEE FIGURE 24)	18
3	4277052	CAROUSEL ASSEMBLY - BLACK	1
4	4273116	STRIKER - SWITCH - BLACK	1
5	4271130	STOP - COLD FOOD DOOR LATCH	1
6	4277012	SPROCKET - 60 TOOTH - MODIFIED	1
7	4271163	COVER - MOTOR - BLACK	1
8	4271162	COVER - CHAIN GUARD - BLACK	1
-	4277059	COLUMN ASSEMBLY - BLACK (INCLUDES INDEX NUMBERS 1, 3, 6, AND THE FOLLOWING 3 ITEMS:) (NOT SHOWN)	1
-	4277011	BEARING-FLANGE	2
-	4277014	WASHER-TRD-1220 THRUST	1
-	4277031	ROLL PIN-.250 X 2.25	1

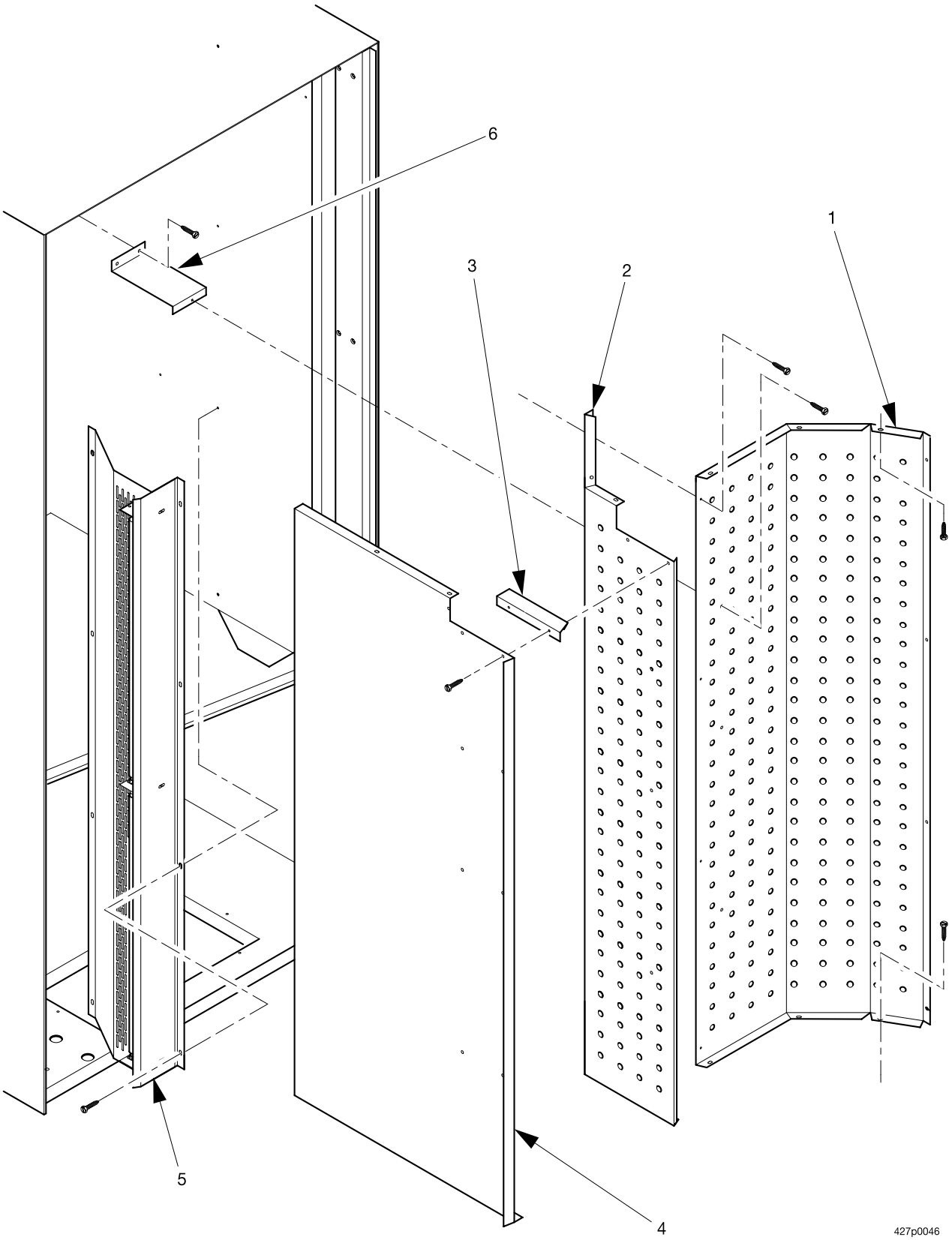

Figure 22. Inner Panels

TABLE 22. INNER PANELS

INDEX	PART NUMBER	DESCRIPTION	QTY.
1	4271149	PANEL - INNER - RIGHT - BLACK	1
2	4271150	PANEL - INNER - CENTER - BLACK	1
3	4271152	BRACKET - SPACING - LEFT - BLACK	1
4	4271151	PANEL - INNER - LEFT - BLACK	1
5	4271172	LIGHT ASSEMBLY - RETURN AIR - BLACK (SEE FIGURE 23)	1
6	4271028	BRACKET - SPACING - REAR	1

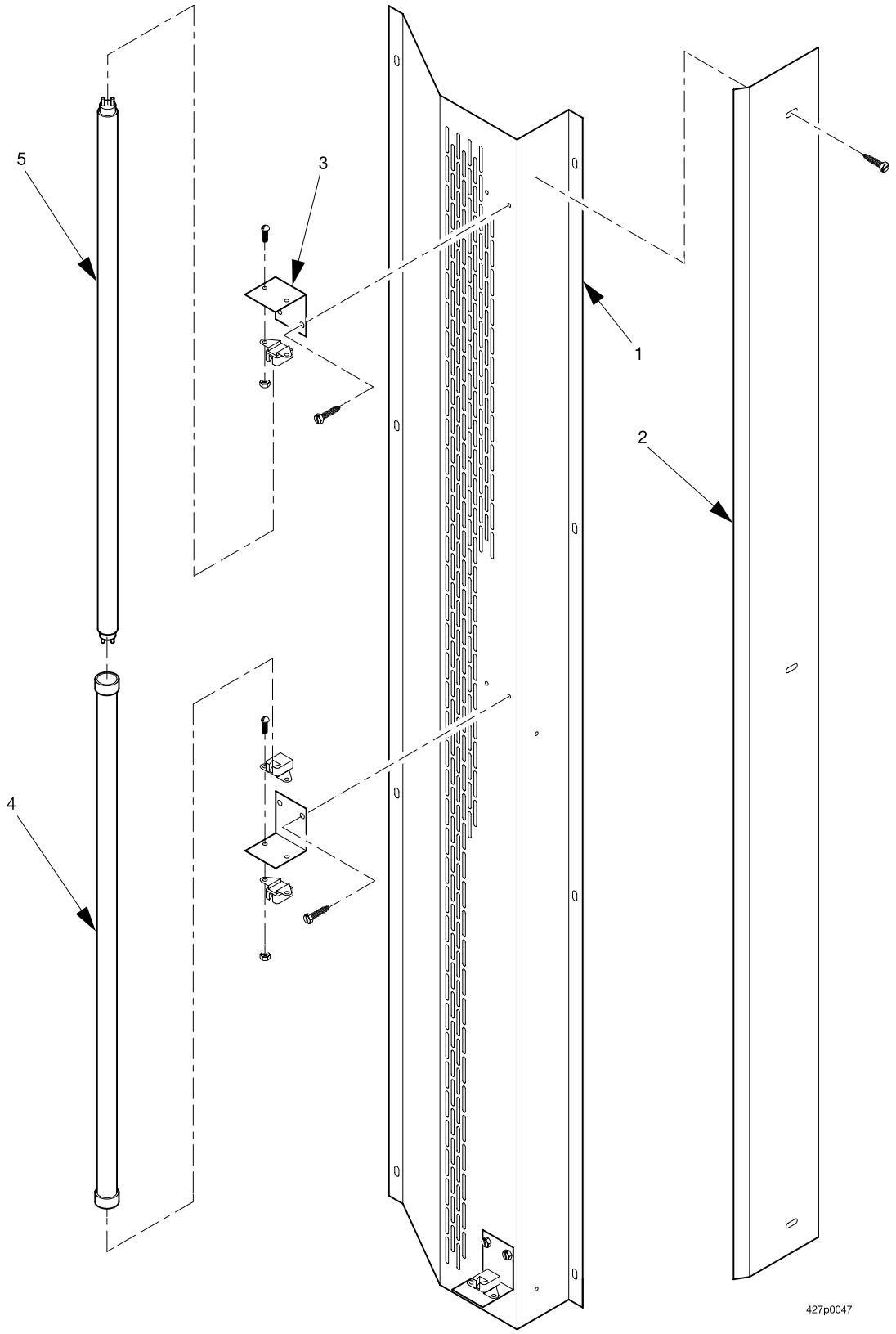

Figure 23. Light Assembly - Return Air - Black

TABLE 23. LIGHT ASSEMBLY - RETURN AIR - BLACK

INDEX	PART NUMBER	DESCRIPTION	QTY.
1	4271155	PANEL-RETURN AIR - BLACK	1
2	4271148	SHIELD-LIGHT - BLACK	1
3	4271161	ANGLE-LIGHT - BLACK	3
4	4271086	SAFETY LAMP SLEEVE W/END CAPS	1
5	4031148	LAMP FLUORESCENT 13W #F13T5CW	1

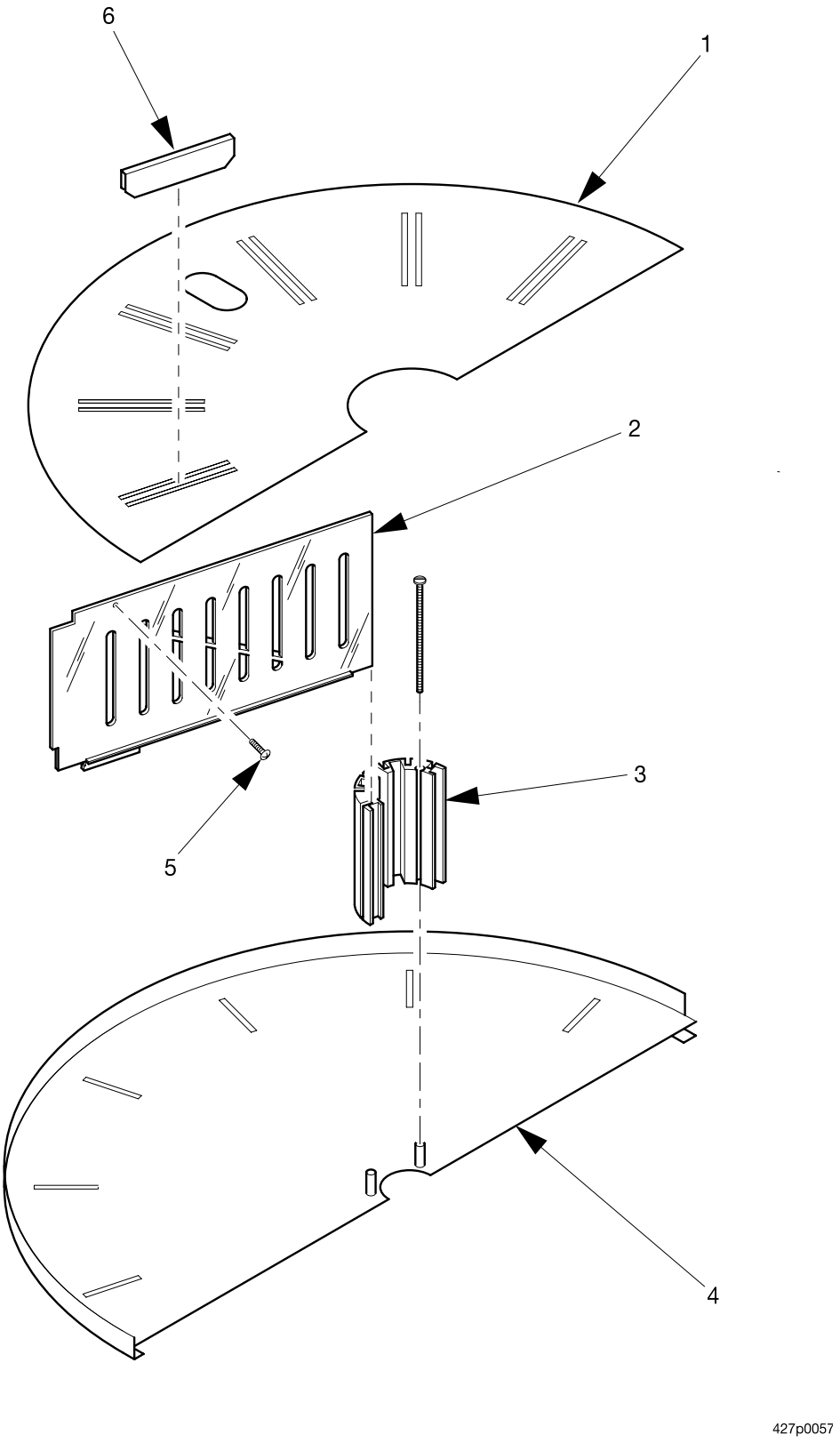

Figure 24. Tray Half Assembly

TABLE 24. TRAY HALF ASSEMBLY

INDEX	PART NUMBER	DESCRIPTION	QTY.
1	4277053	PLATE HOLDER - BLACK	1
2	4277029	TRAY DIVIDER	OPT.
3	4277049	TRAY DIVIDER SUPPORT	1
4	4277054	TRAY SEGMENT WELD ASSEMBLY - BLACK	1
5	4047056	SCREW - SHEET METAL #8X3/8 PHS	OPT.
6	4277030	HOLDER	OPT.

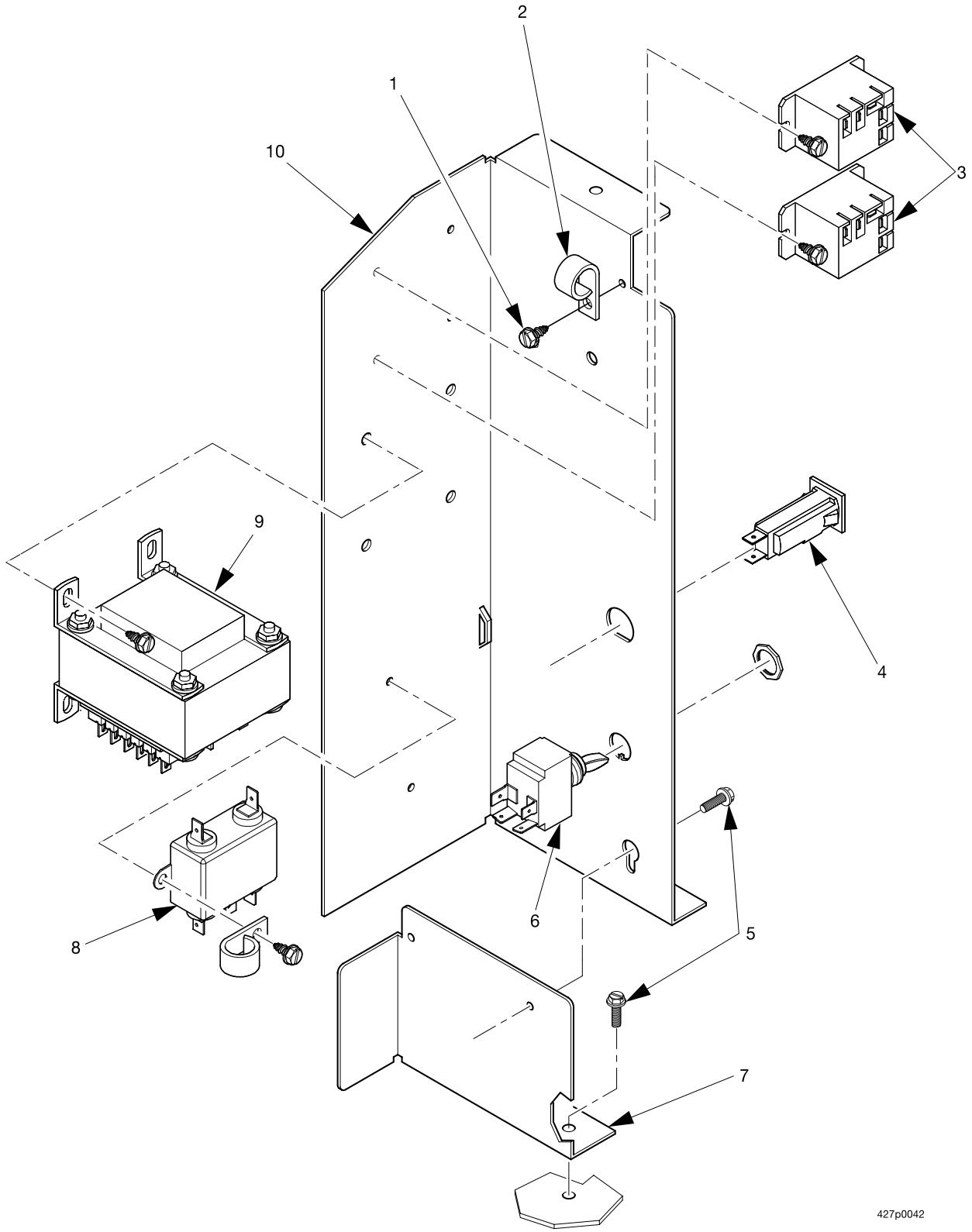

Figure 25. Power Panel Assembly (U.K./U.S.)

TABLE 25. POWER PANEL ASSEMBLY (U.K./U.S.)

INDEX	PART NUMBER	DESCRIPTION	QTY.
-	4271107	POWER PANEL ASSEMBLY (U.K.)	1
	4271089	POWER PANEL ASSEMBLY (U.S.)	
1	3157060	SCREW - #8-32 X .31 HEX W/HD.	7
2	4732024	RETAINER - HARNESS	3
3	9989677	RELAY - SPDT 24 VDC - PANEL MOUNT	2
4	9989674	CIRCUIT BREAKER - 4 AMP	1
5	1451056	SCREW - 8-32 X .31 HWS TY23 ZB WAX	4
6	9984629	SWITCH - TOGGLE - DPST - 20 AMP	1
7	4271129	BRACKET - ELECTRICAL PANEL	1
8	9989100	INTERFERENCE FILTER	1
9	9989046	24V TRANSFORMER - DUAL PIR. - .187 TERM.	1
10	4271128	PANEL - ELECTRICAL	1

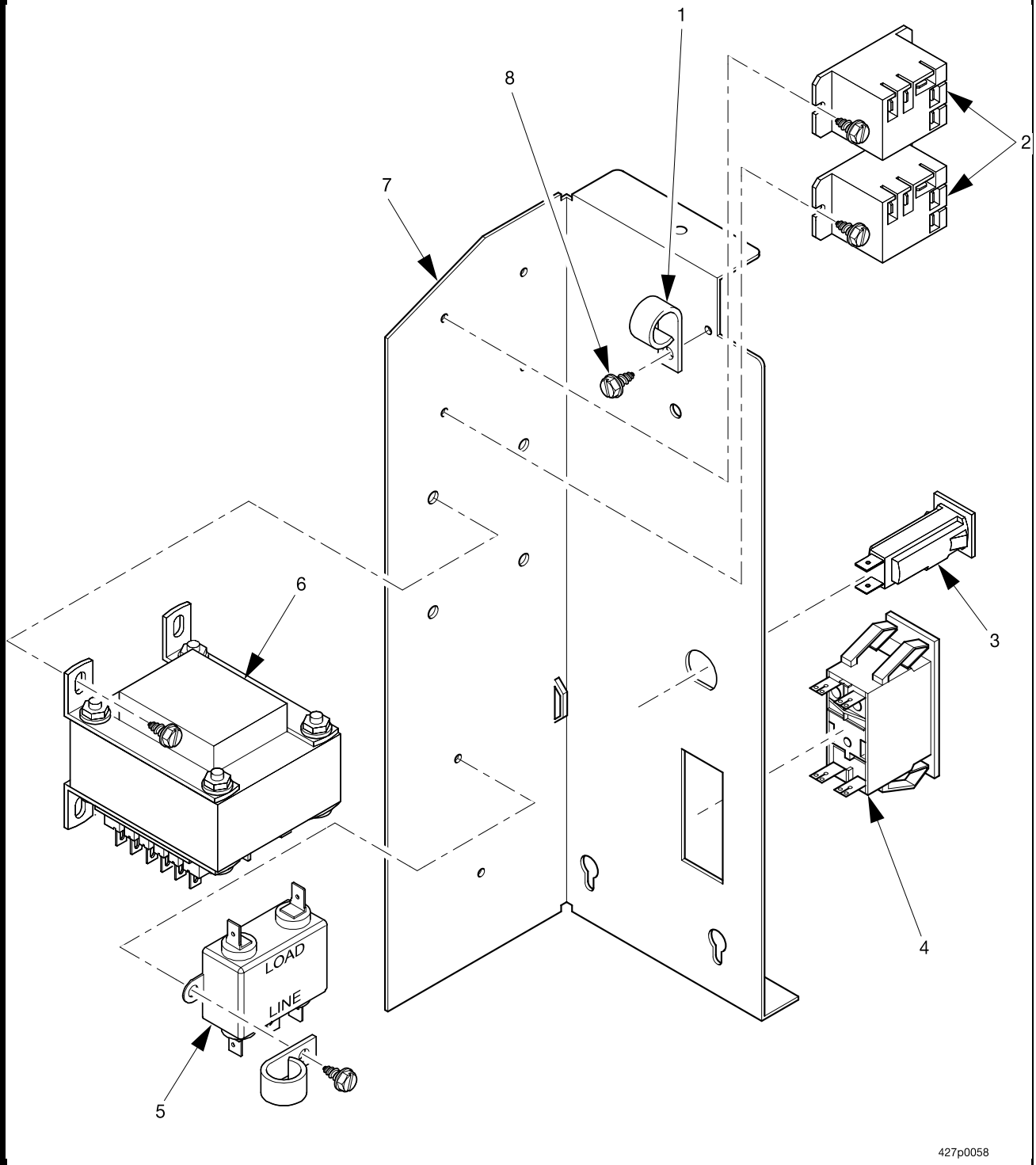

Figure 26. Power Panel Assembly (France/Germany)

TABLE 26. POWER PANEL ASSEMBLY (FRANCE/GERMANY)

INDEX	PART NUMBER	DESCRIPTION	QTY.
-	4271106	POWER PANEL ASSEMBLY - FR./GER.	1
1	4732024	RETAINER - HARNESS	3
2	9989677	RELAY - SPDT 24 VDC - PANEL MOUNT	2
3	9989674	CIRCUIT BREAKER - 4 AMP	1
4	9984627	CIRCUIT BREAKER/SWITCH - 16 AMP	1
5	1451056	SCREW - 8-32 X .31 HWS TY23 ZB WAX	4
6	4271129	BRACKET - ELECTRICAL PANEL	1
7	9989100	INTERFERENCE FILTER	1
8	9989046	24V TRANSFORMER - DUAL PIR. - .187 TERM.	1
9	4271127	PANEL - ELECTRICAL	1
10	3157060	SCREW - #8-32 X .31 HEX W/HD.	7

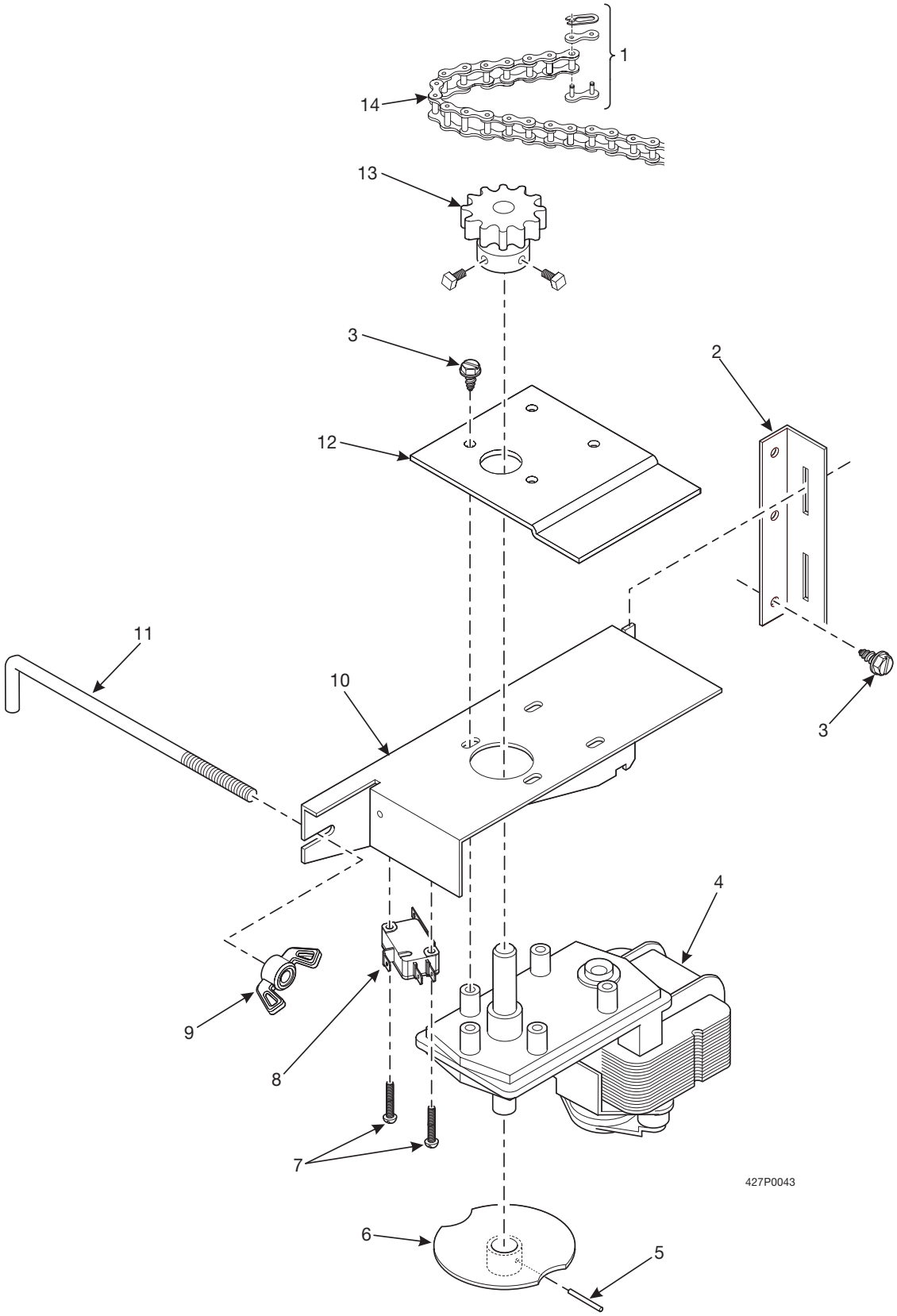

Figure 27. Turret Motor Assembly

TABLE 27. TURRET MOTOR ASSEMBLY

INDEX	PART NUMBER	DESCRIPTION	QTY.
-	4271088	TURRET MOTOR ASSEMBLY - 115V	1
	4271108	TURRET MOTOR ASSEMBLY - 230V	
1	4277013	CHAIN REPAIR LINK - 3/8	1
2	4271154	BRACKET - SUPPORT - MOTOR MOUNTING - TURRET	1
3	3157060	SCREW - #8-32 X .31 HEX W/ HD. SLOTTED	4
4	4277050	DRIVE MOTOR ASSEMBLY - TURRET - 115V (PART OF 4271088)	1
	4277051	DRIVE MOTOR ASSEMBLY - TURRET - 230V (PART OF 4271108)	
5	6104219	ROLL PIN - .094 X 5/8	1
6	4271001	CAM ASSEMBLY - MOTOR COLUMN	1
7	5262141	SCREW - 4-40 X 9/16 PHP	2
8	4271004	MICROSWITCH VL3	1
9	4271080	NUT - WING - #8-32 WITH NYLON INSERT	1
10	4271173	BRACKET - MOTOR MOUNT - TURRET	1
11	4271065	BOLT - ANCHOR - #8-32 X 2.25	1
12	4271166	SUPPORT - MOTOR	1
13	4271002	SPROCKET - 10 TOOTH - STEEL	1
14	4277038	CHAIN - DRIVE	1

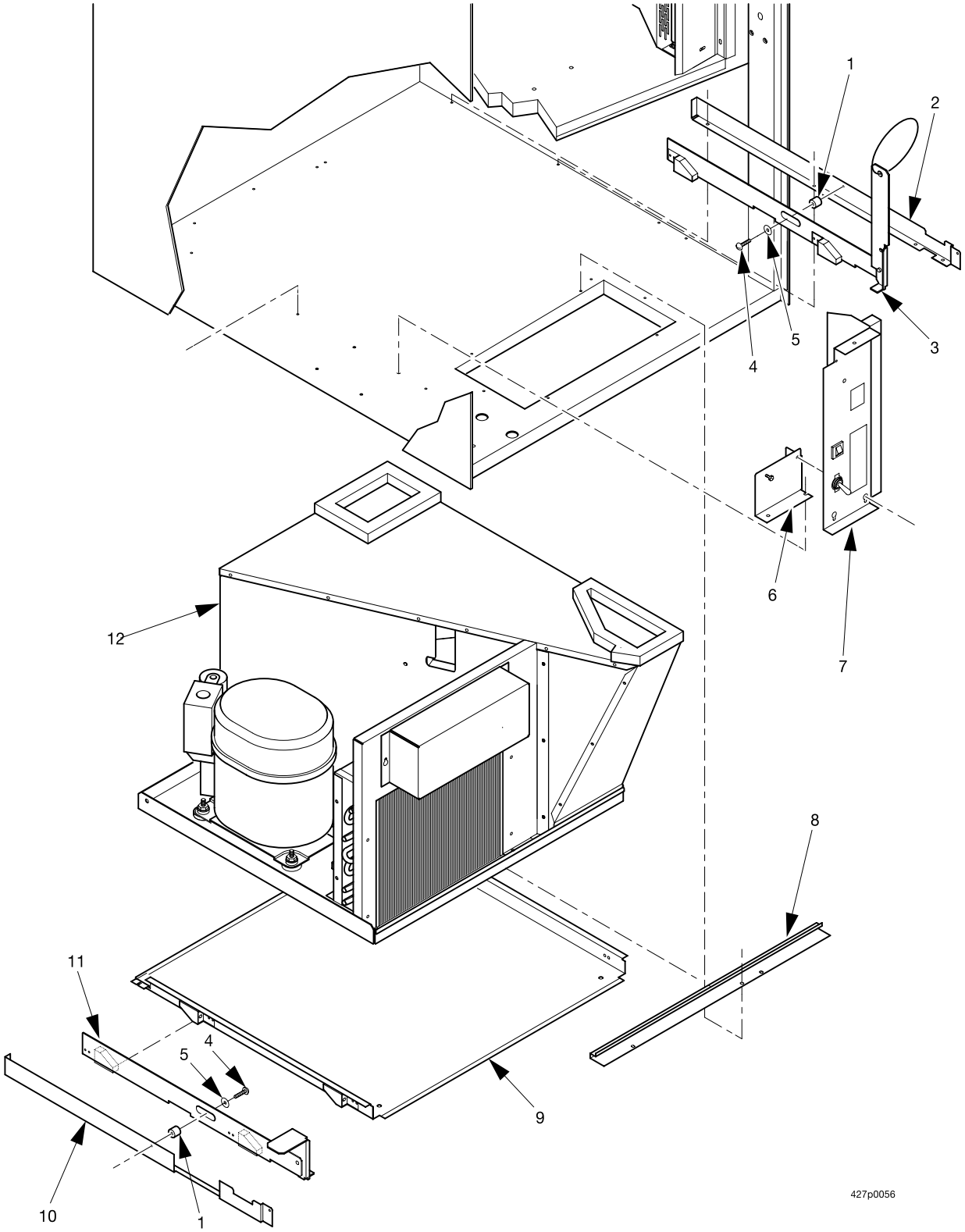

Figure 28. Refrigeration Unit

TABLE 28. REFRIGERATION UNIT

INDEX	PART NUMBER	DESCRIPTION	QTY.
1	4407042	SPACER - .38 OD X .171 ID X 12 LG	2
2	4274140	GUIDE - LIFT - RIGHT	1
3	4274137	SLIDER ASSEMBLY - LIFT - RIGHT	1
4	G1472027	SCREW - SHEET METAL-#6 X .44	2
5	2237002	WASHER PACK - LEVELER	2
6	4271129	BRACKET - ELECTRICAL PANEL	1
7	4271107	POWER PANEL ASSEMBLY (U.K.) (SEE FIGURE 25)	1
	4271089	POWER PANEL ASSEMBLY (U.S.) (SEE FIGURE 25)	
	4271106	POWER PANEL ASSEMBLY - FR./GER. (SEE FIGURE 26)	
8	4274035	SUPPORT/RETAINER - REFRIGERATION CHASSIS	1
9	4274099	CARRIAGE ASSEMBLY - LIFT	1
10	4274139	GUIDE - LIFT - LEFT	1
11	4274134	SLIDER ASSEMBLY - LIFT - LEFT	2
12	4274120	REFRIGERATION UNIT - 115V 60HZ (U.S.) (SEE FIGURE 29)	1
	4274121	REFRIGERATION UNIT - 230V 50HZ (FR./GER./U.K.) (SEE FIGURE 29)	

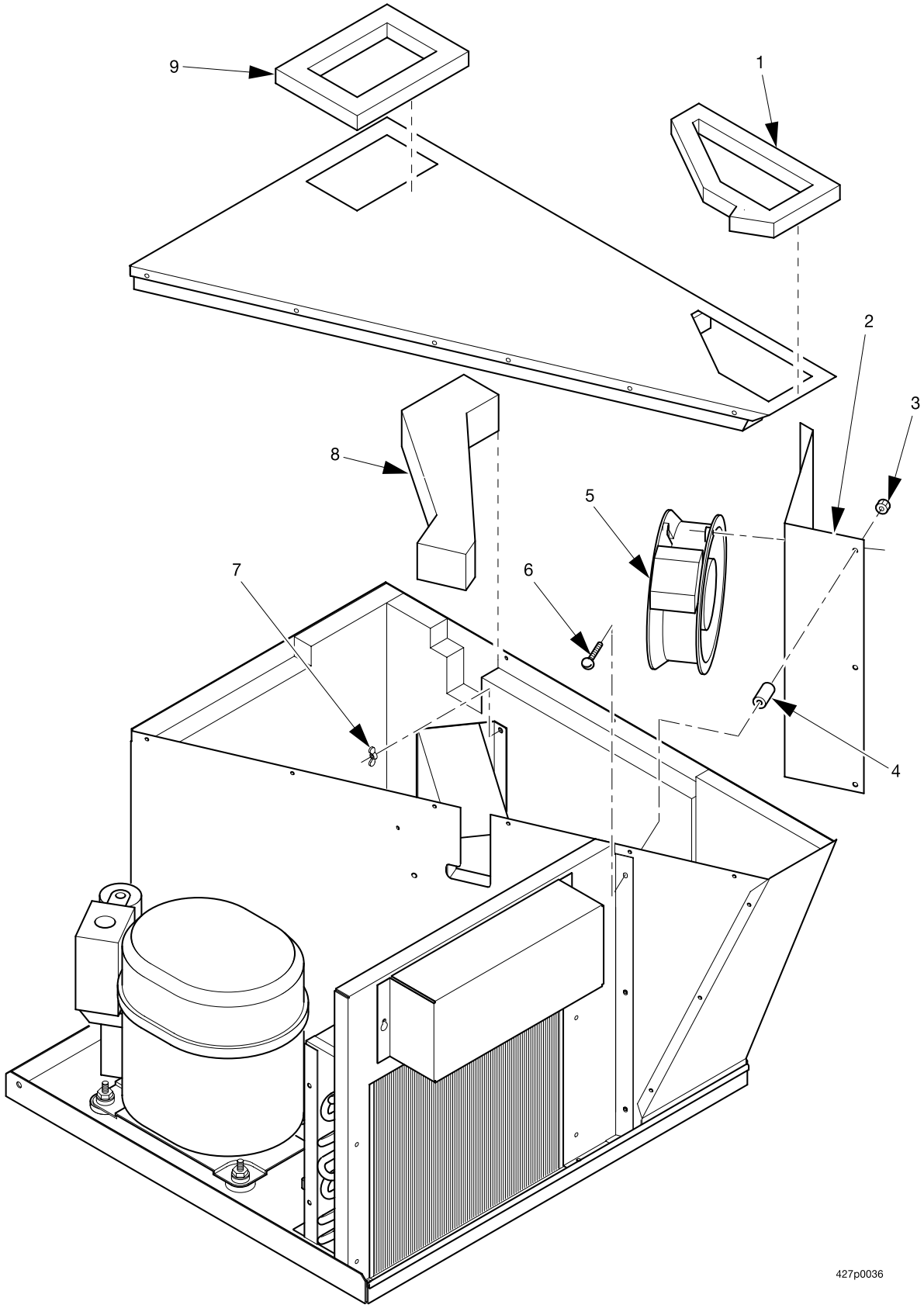

Figure 29. Refrigeration Unit Components (Part 1 of 4)

TABLE 29. REFRIGERATION UNIT COMPONENTS (PART 1 OF 4)

INDEX	PART NUMBER	DESCRIPTION	QTY.
-	4274120	REFRIGERATION UNIT-115V 60HZ (U.S.)	1
	4274121	REFRIGERATION UNIT-230V 50HZ (FR./GER./U.K.)	
1	4274115	SEAL - EVAP INLET	1
2	4274129	SHROUD - FAN - EVAPORATOR	1
3	6104424	NUT - 10-32 KEPS	5
4	4274009	SPACER - NYLON - 1.0 L X .5 O.D.	5
5	4314014	FAN - EVAPORATOR - AXIAL	1
	4314054	FAN - EVAPORATOR - AXIAL - FOREIGN	
6	4402037	SCREW - #10-32 X 1 1/2 RHS-SS	5
7	9900039	WING NUT #10-32 SELF-LOCKING	4
8	4274008	BAFFLE - TOP - EVAPORATOR	1
9	4274057	SEAL - EVAP OUTLET	1

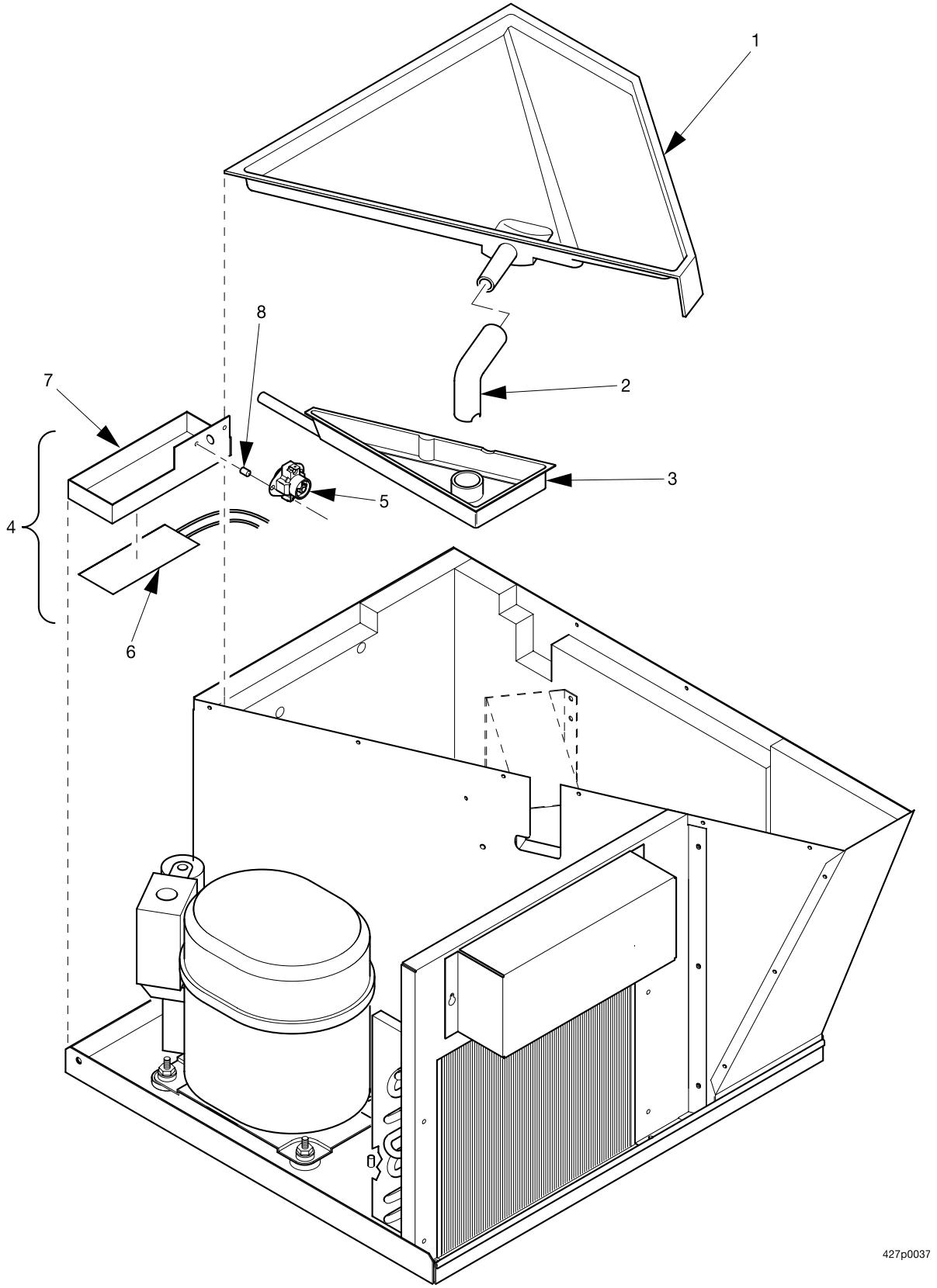

Figure 30. Refrigeration Unit Components (Part 2 of 4)

TABLE 30. REFRIGERATION UNIT COMPONENTS (PART 2 OF 4)

INDEX	PART NUMBER	DESCRIPTION	QTY.
1	4274178	PAN ASSEMBLY - CONDENSATE	1
2	4274082	TUBE-DRAIN-CONDENSATE	1
3	4274084	PAN & TUBE ASSEMBLY - EVAPORATOR	1
4	4274078	PAN & HEATER ASSEMBLY - 115V (U.S.) (INCLUDES THE FOLLOWING 6 ITEMS)	1
	4274079	PAN & HEATER ASSEMBLY - 230V (FR./GER./U.K.) (INCLUDES THE FOLLOWING 6 ITEMS)	
5	4274063	THERMOSTAT - ADJUSTABLE	1
6	4274061	HEATER ASSEMBLY - PAN - 115V (U.S.)	1
	6369000	HEATER - 230V/100W - SILICONE (FR./GER./U.K.)	
7	4274060	PAN - EVAPORATION - HEATED	1
8	4274066	SPACER - THERMOSTAT (NOT SHOWN)	2
-	9900081	NUT #8-32 KEPS ZINC PLATE (NOT SHOWN)	-
-	9900115	SCREW #8-32 X 3/4 RHS (NOT SHOWN)	-

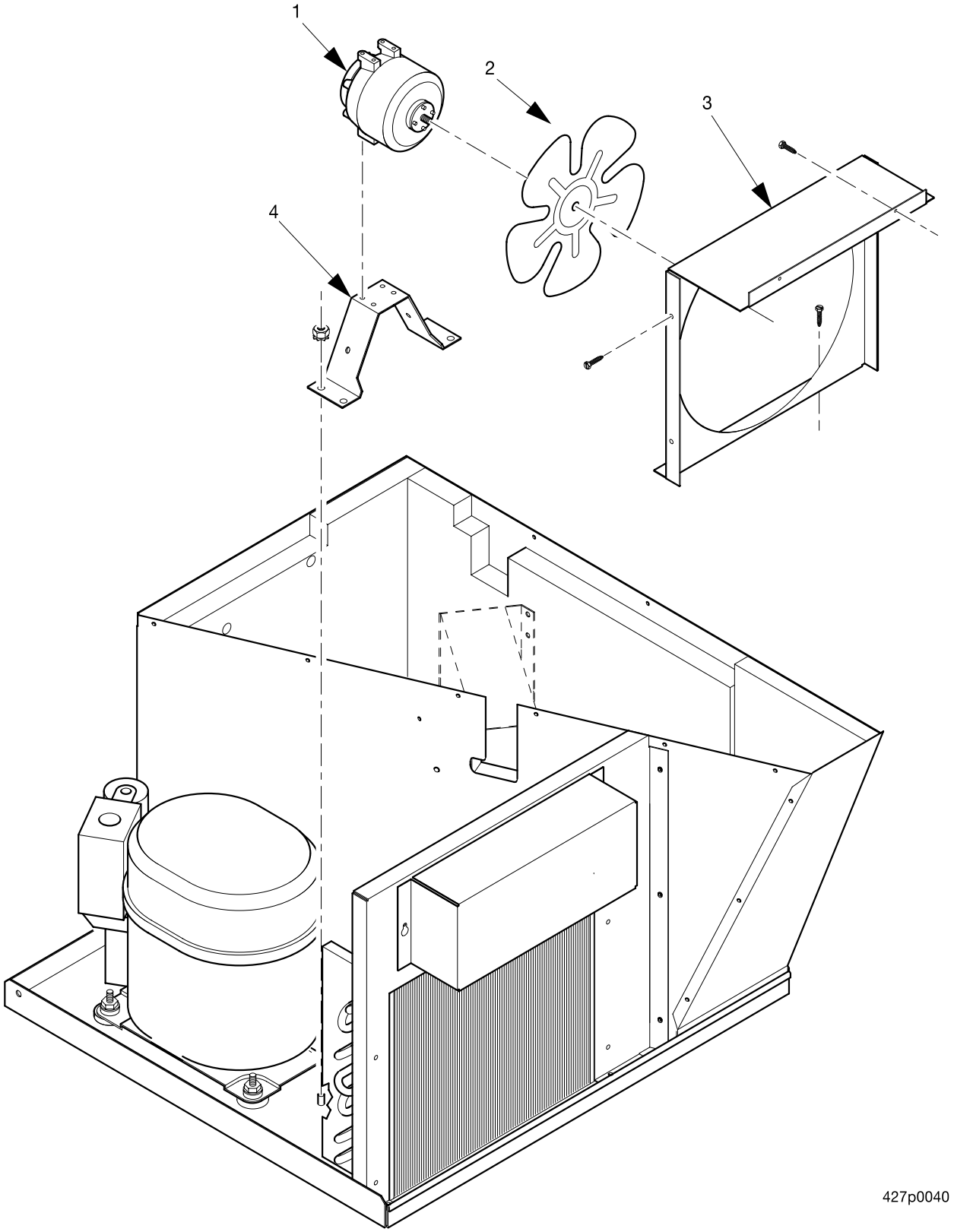

Figure 31. Refrigeration Unit Components (Part 3 of 4)

TABLE 31. REFRIGERATION UNIT COMPONENTS (PART 3 OF 4)

INDEX	PART NUMBER	DESCRIPTION	QTY.
1	4304231	MOTOR - CONDENSER - 16 WATT (U.S.)	1
	4314089	MOTOR - CONDENSER FAN-16W-MORILL (FR./GER./U.K.)	
2	4294019	BLADE - CONDENSER FAN - FT950CW26S	1
3	4294004	SHROUD - CONDENSER COIL	1
4	4274055	BRACKET - MOTOR - FAN	1

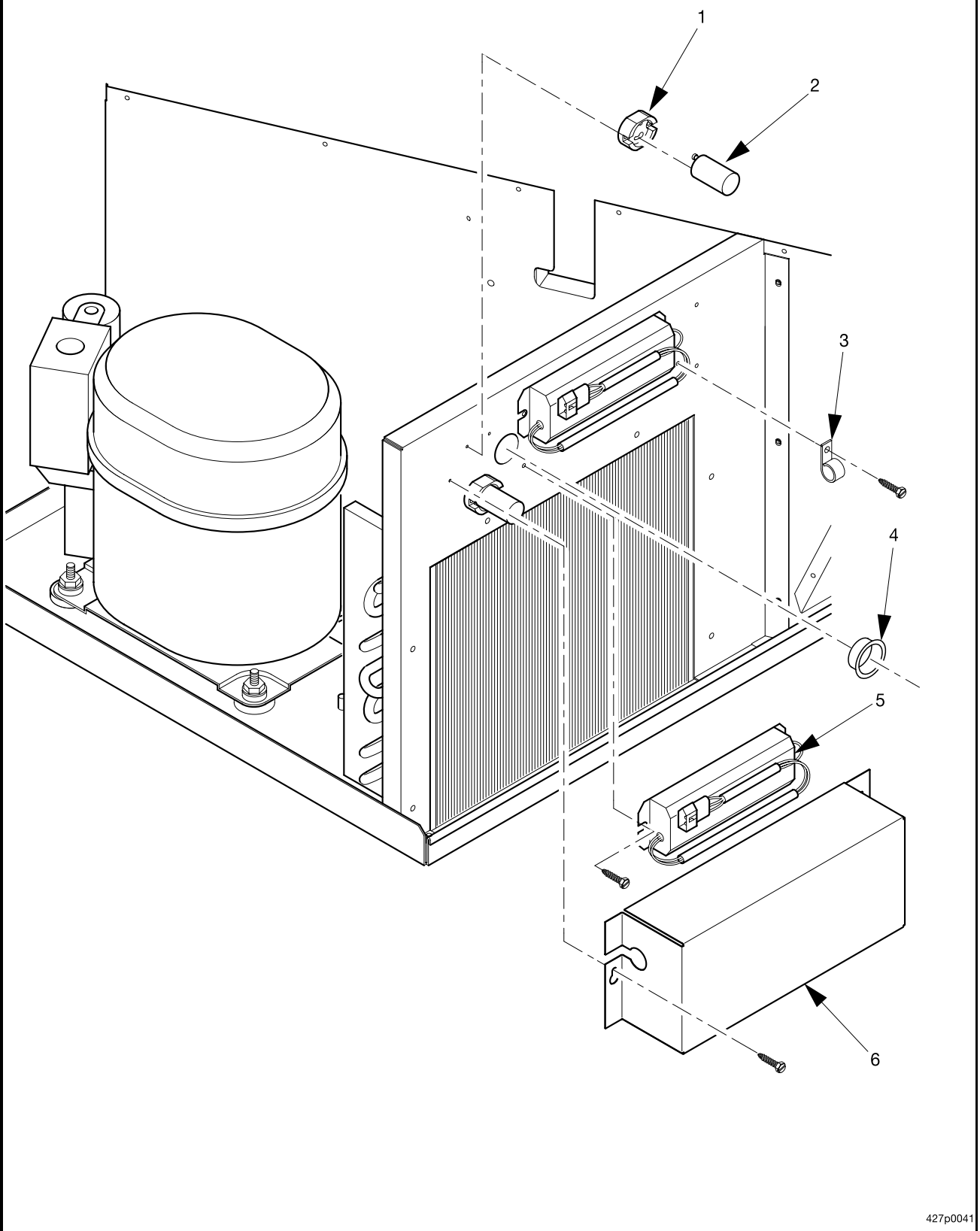

Figure 32. Refrigeration Unit Components (Part 4 of 4)

TABLE 32. REFRIGERATION UNIT COMPONENTS (PART 4 OF 4)

INDEX	PART NUMBER	DESCRIPTION	QTY.
1	4319008	STARTER SOCKET ASSEMBLY	2
2	4031150	FLUORESCENT LAMP STARTER FS-4	2
3	4732024	RETAINER - HARNESS	1
4	4271057	BUSHING-1.0" - OPEN/CLOSED	1
5	4279015	BALLAST ASSEMBLY - 13W - 115V (U.S.)	2
	6396028	BALLAST ASSEMBLY - 13W - 230V (FR./GER./U.K.)	
6	4271143	COVER - BALLAST	1

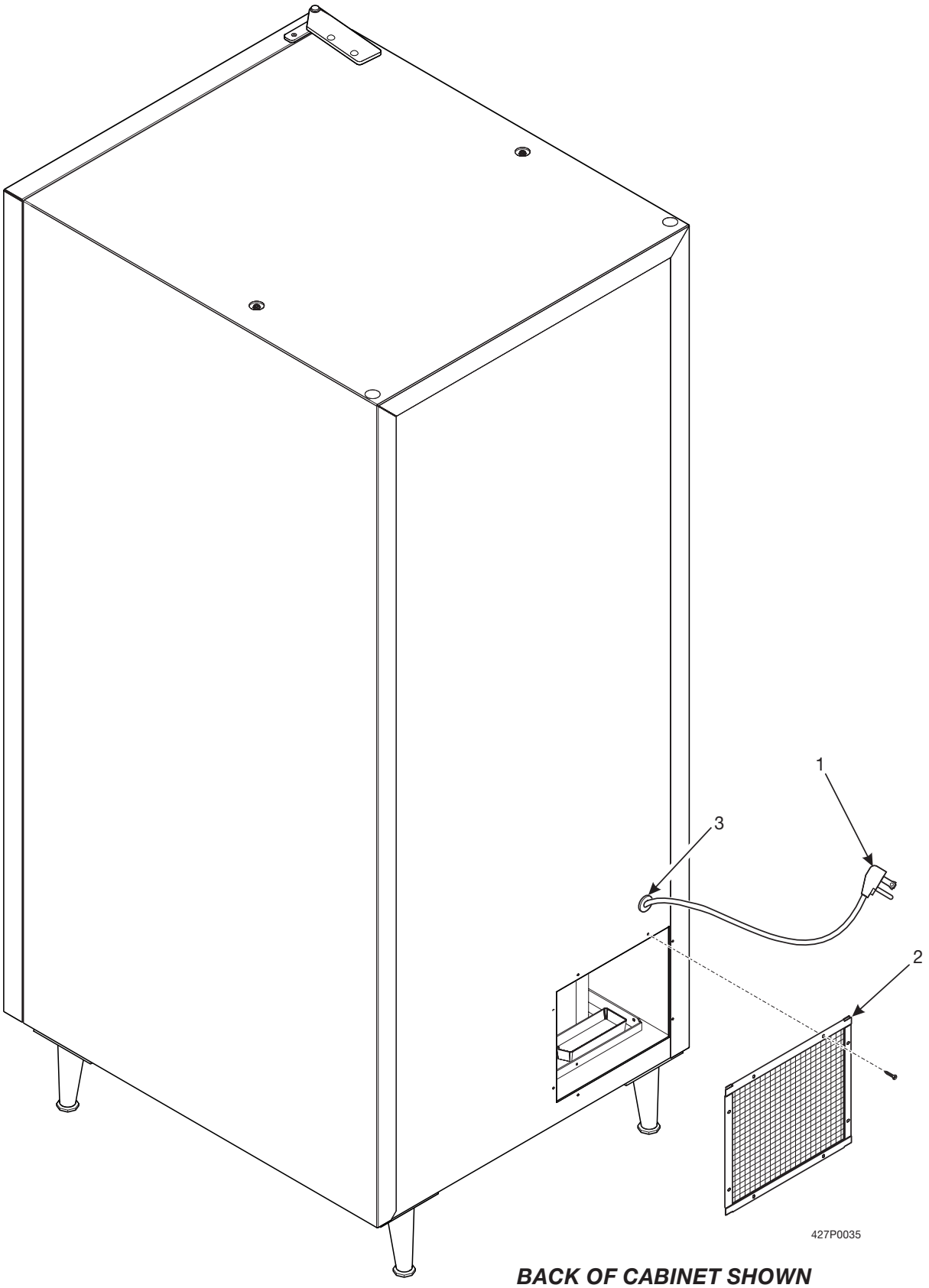

Figure 33. Cabinet Components - Rear

TABLE 33. CABINET COMPONENTS - REAR

	PART NUMBER	DESCRIPTION	
1	9989781	POWER CORD - 14 AWG - DOMESTIC (U.S.)	1
	9989576	POWER CORD - WITH BSI PLUG (U.K.)	
	9989577	POWER CORD - EURO PLUG (FR./GER.)	
2	4271081	SCREEN ASSEMBLY - REAR	1
3	3104056	BUSHING - STRAIN RELIEF #5R-7W-2	1
-	9989110	FILTER-POWER LINE - EMI (FR./GER./U.K.) (NOT SHOWN)	1
-	9989116	JUMPER - EMI FILTER - 25" (FR./GER./U.K.) (NOT SHOWN)	1

4279004
POWER AND RELAYS TO PCB HARNESS

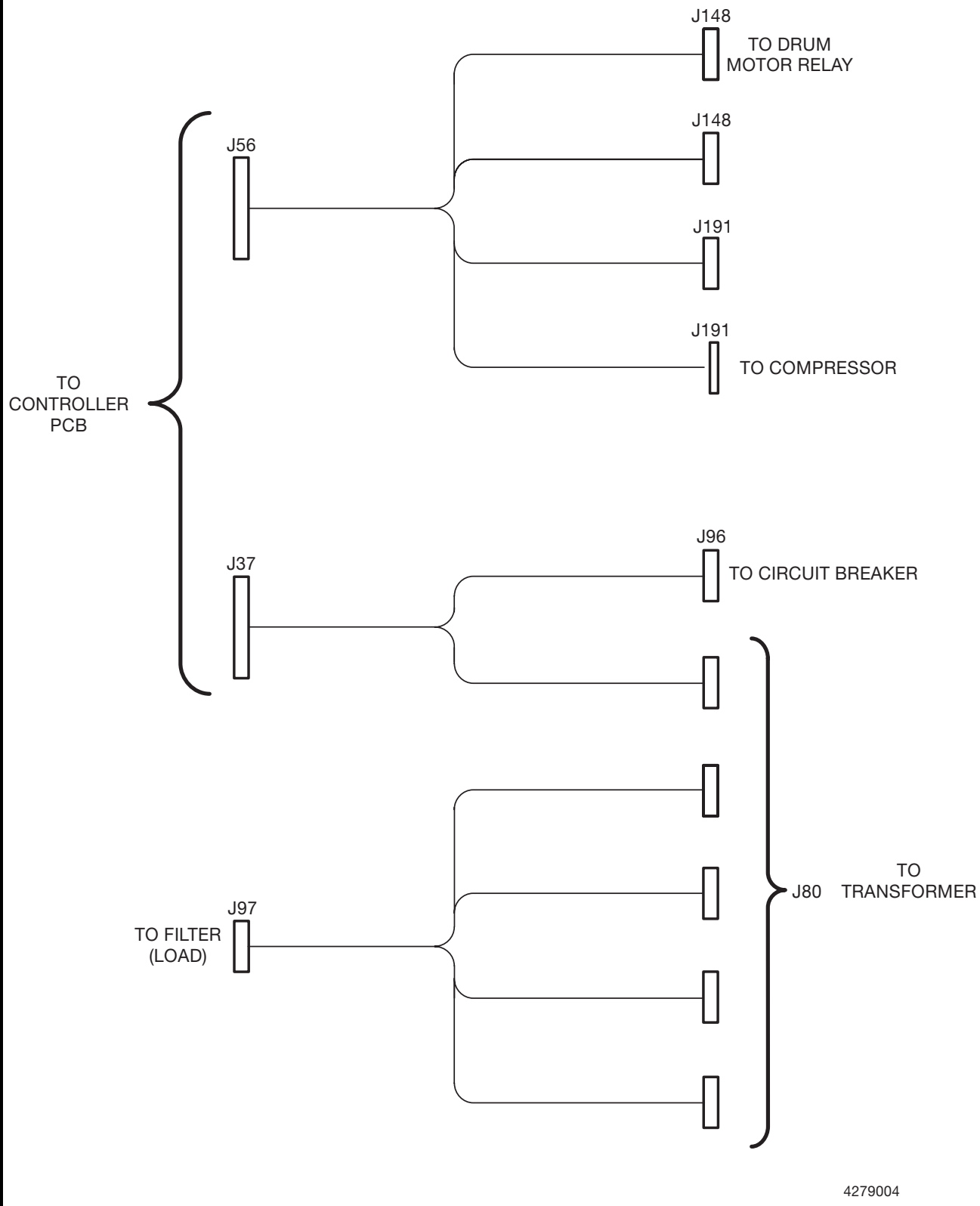

Figure 34. Wiring Harnesses (Part 1 of 6)

4279005
FLUORESCENT LIGHT HARNESS

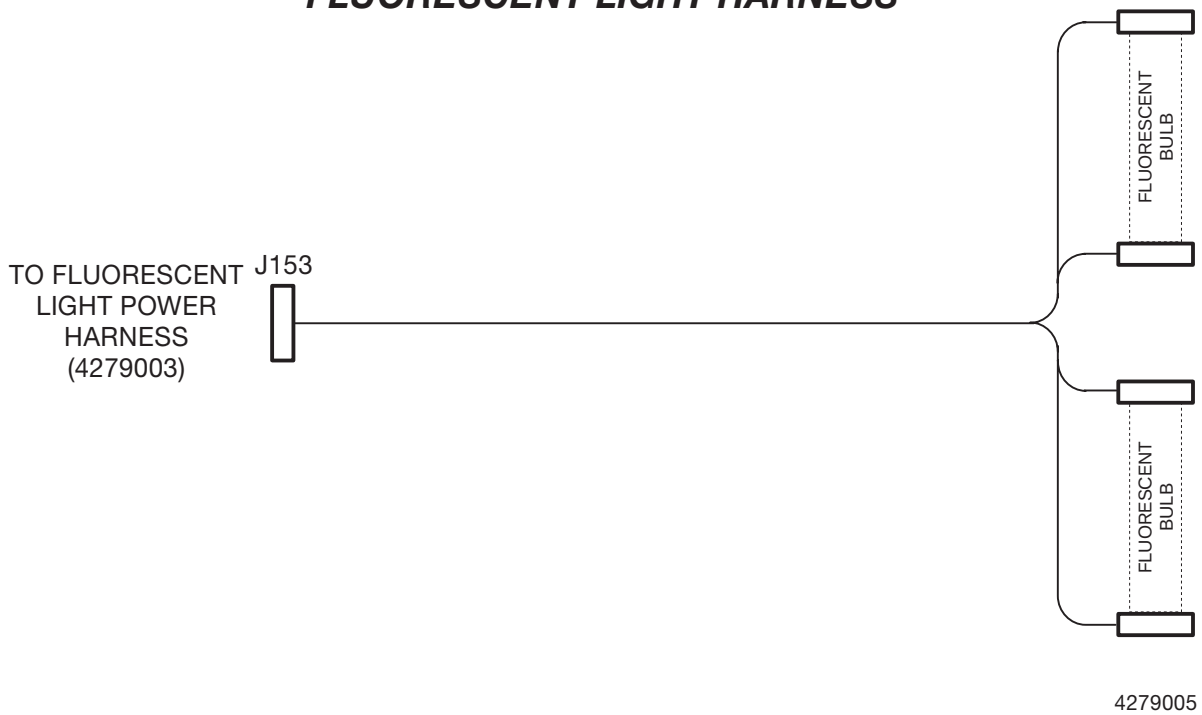

4279013

24 VOLT DUMB COIN MECH HARNESS

Figure 34. Wiring Harnesses (Part 2 of 6)

4279010
SOLENOID HARNESS

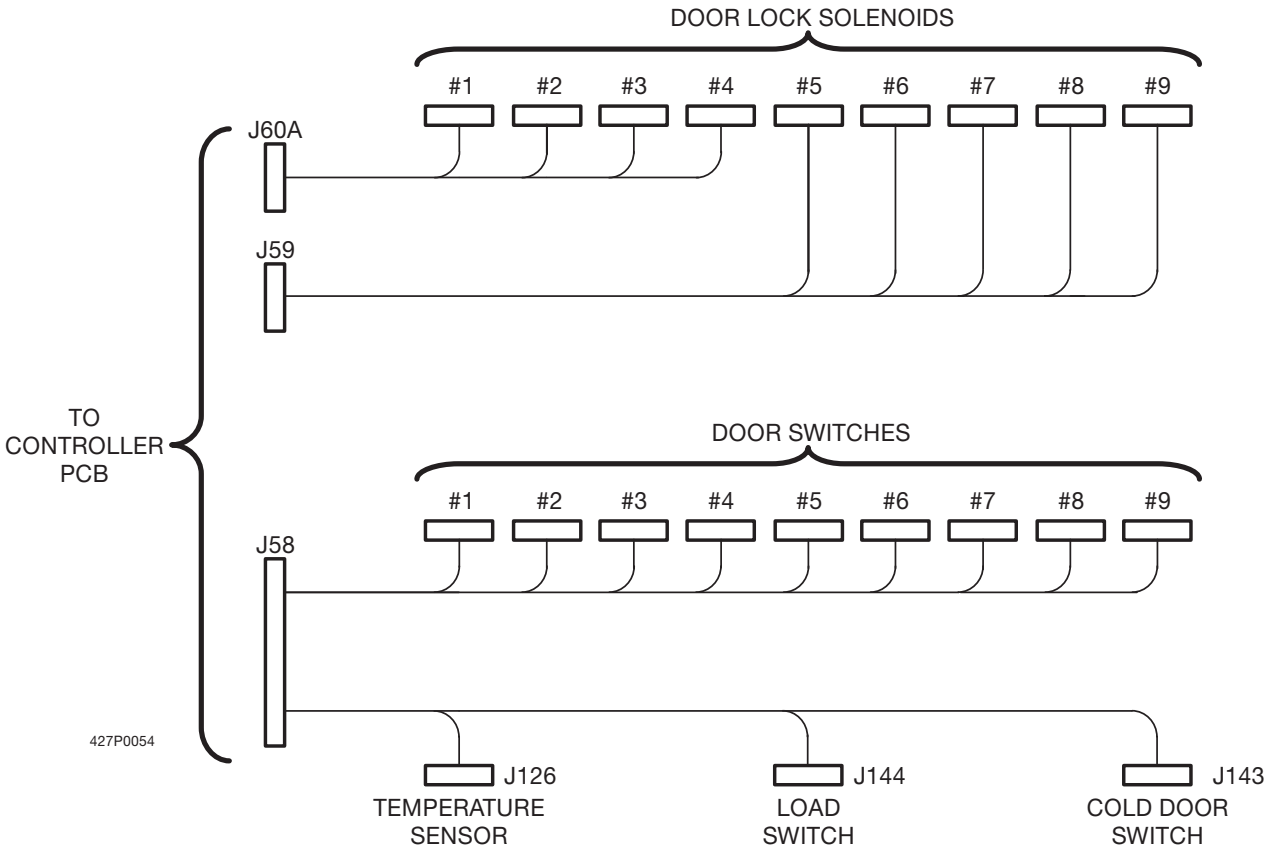

4279010

4279033

AC POWER AND PANEL HARNESS

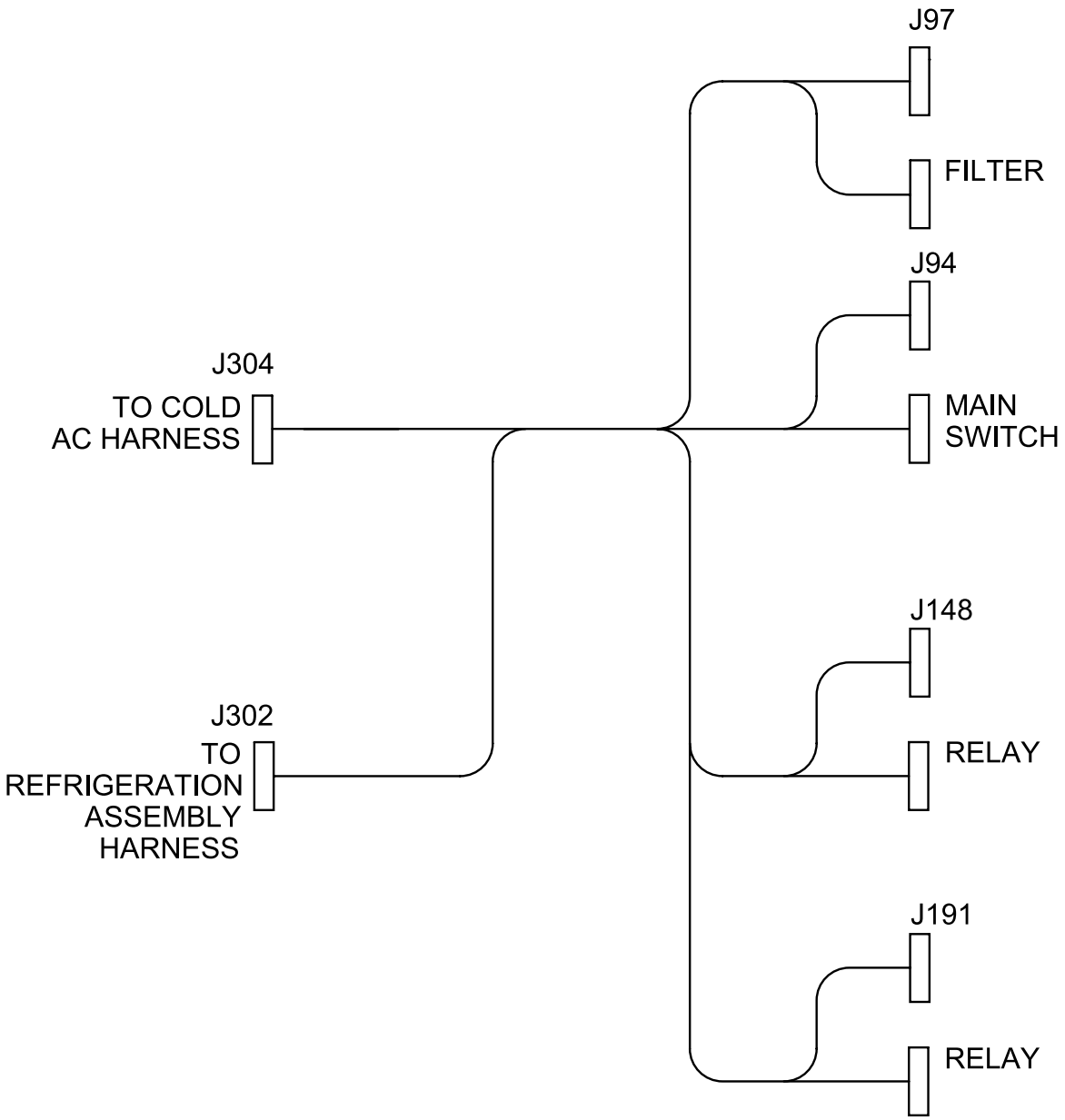

Figure 34. Wiring Harnesses (Part 3 of 6)

4279032

REFRIGERATION HARNESS ASSEMBLY

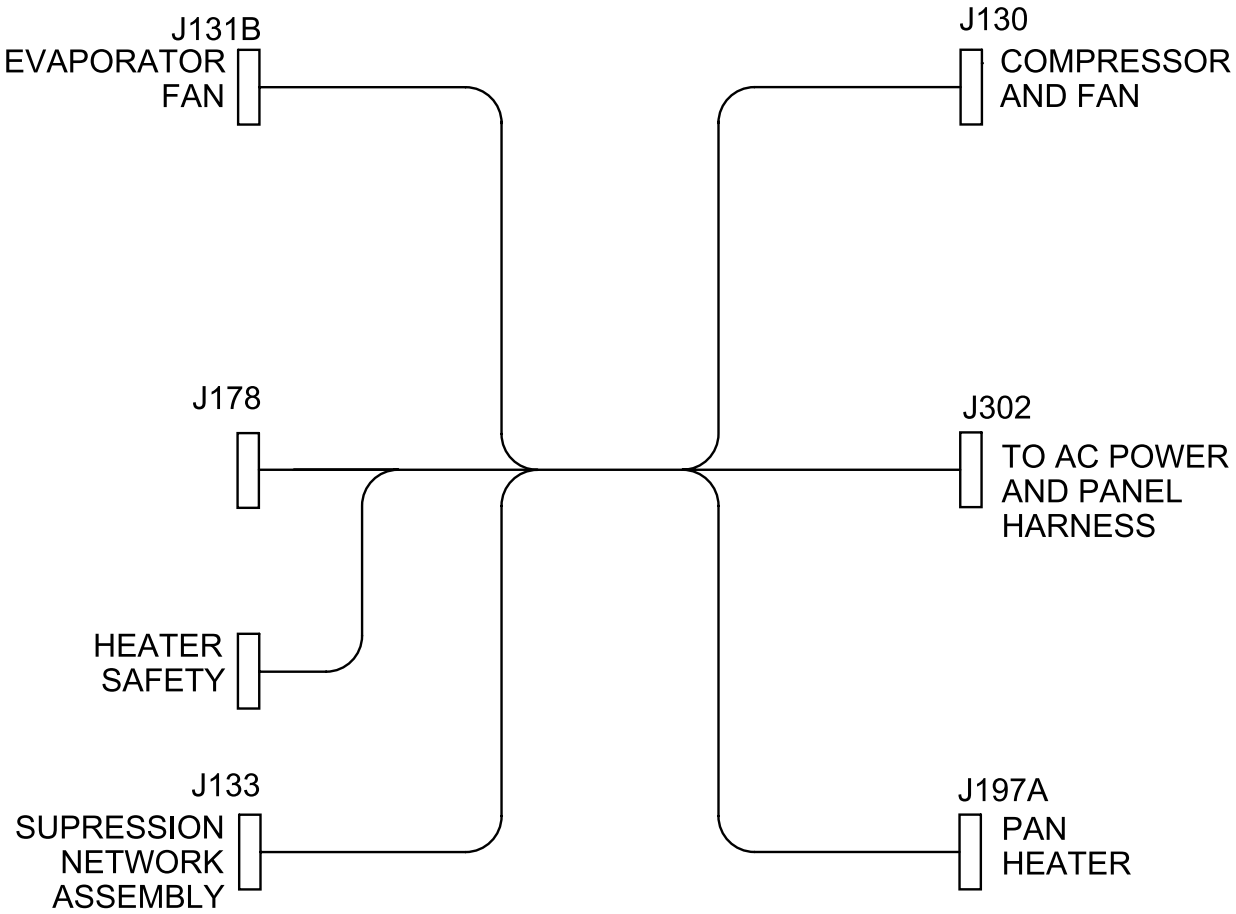

Figure 34. Wiring Harnesses (Part 4 of 6)

4279031

BALLAST AND STARTER HARNESS

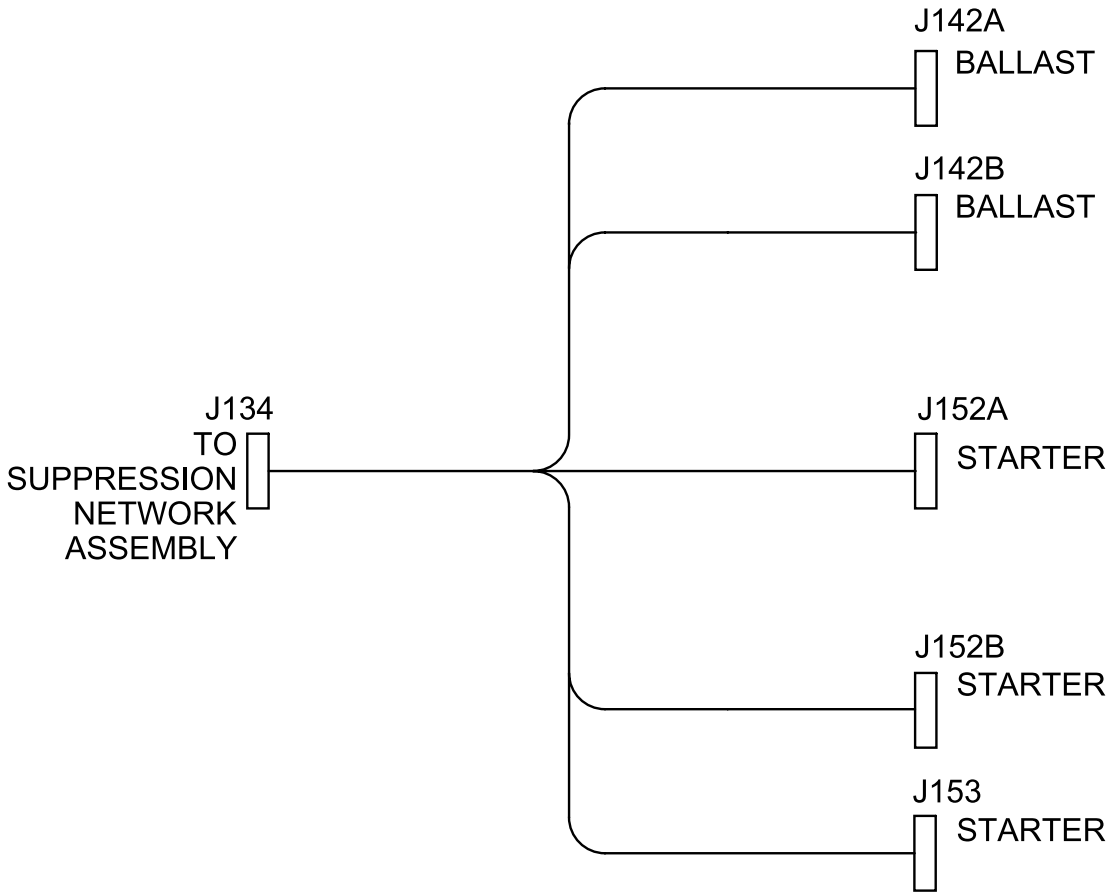

Figure 34. Wiring Harnesses (Part 5 of 6)

4279030

COLD AC HARNESS

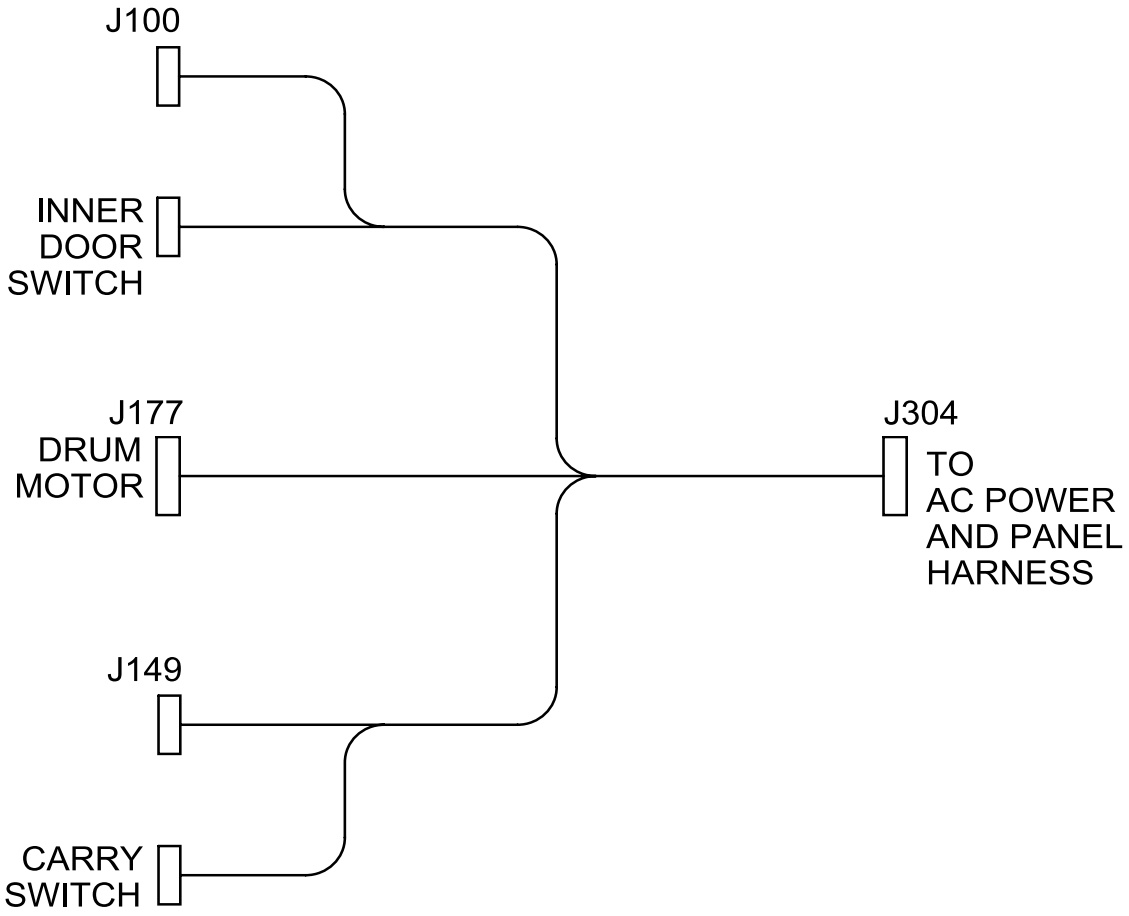

Figure 34. Wiring Harnesses (Part 6 of 6)

TABLE 35. MISCELLANEOUS HARNESSES (NOT SHOWN)

PART NUMBER	DESCRIPTION
9989706	HARNESS-MONETARY**"MDB"** (U.S. WITH MDB)
4279020	HARNESS - GPL - EXEC. MECH (FR./GER./U.K. WITH EXEC.)
9989730	PCB ASSEMBLY - GPL - EXEC. INTERFACE (FR./GER./U.K. WITH EXEC.)

TABLE 36. BAG ASSEMBLY - U.S. - B4290000

PART NUMBER	DESCRIPTION	QTY.
WD429002	W.D.-429-115V/230V	1
4270022	COLUMN NUMBER CARD	-
4270025	LABEL-LOCATE FOOD HERE	1
4270048	LABELS-PRICE-DOM.-40 CENTS T	1
4270052	INSTR.-FOODKING MON.SETUP	1
4290001	FOODKING SETUP MANUAL	1
5920012	BAG-PLASTIC-12 X 15	1

TABLE 37. BAG ASSEMBLY - FRANCE - B4290001

PART NUMBER	DESCRIPTION	QTY.
WD429002	W.D.-429-115V/230V	1
4270022	COLUMN NUMBER CARD	1
4270032	LABEL-LOCATE FOOD HERE-FRENC	1
4270034	LIST-BAG ASSY B4270001 CONTE	1
4270052	INSTR.-FOODKING MON.SETUP	1
4290001	FOODKING SETUP MANUAL	1
5920012	BAG-PLASTIC-12 X 15	1

TABLE 38. BAG ASSEMBLY - GERMANY - B4290002

PART NUMBER	DESCRIPTION	QTY.
WD429002	W.D.-429-115V/230V	
4270022	COLUMN NUMBER CARD	
4270033	LABEL-LOCATE FOOD HERE-GER.	
4270035	LIST-BAG ASSY B4270002 CONTE	
4270044	LABELS-PRICE-INTERNATIONAL-L	
4270045	LABELS-PRICE-INTERNATIONL-MI	-
4270046	LABELS-PRICE-INTERNATIONAL-H	1
4270052	INSTR.-FOODKING MON.SETUP	1
4290001	FOODKING SETUP MANUAL	1
5920012	BAG-PLASTIC-12 X 15	1

TABLE 39. BAG ASSEMBLY - U.K. - B4290003

PART NUMBER	DESCRIPTION	QTY.
WD429002	W.D.-429-115V/230V	1
1575083	COIN CHUTE & BRACKET ASSEMBL	1
1575086	INSTR.SHEET-COIN CHUTE & BRK	1
4270022	COLUMN NUMBER CARD	1
4270025	LABEL-LOCATE FOOD HERE	1
4290004	LABELS-PRICE-UK-25P THRU2L60	1
4290005	LABELS-PRICE-UK-2L65PTHRU3L5	1
4270052	INSTR.-FOODKING MON.SETUP	1
4290001	FOODKING SETUP MANUAL	
5920012	BAG-PLASTIC-12 X 15	1

TABLE 40. BAG ASSEMBLY - BELGIUM - B4290004

PART NUMBER	DESCRIPTION	QTY.
WD429002	W.D.-429-115V/230V	1
.1575083	COIN CHUTE & BRACKET ASSEMBL	1
1575086	INSTR.SHEET-COIN CHUTE & BRK	1
4270022	COLUMN NUMBER CARD	1
4270025	LABEL-LOCATE FOOD HERE	1
4290006	LABELS-PRICE-INTERNATIONAL-L	1
4290007	LABELS-PRICE-INTERNATIONL-MI	1
4270052	INSTR.-FOODKING MON.SETUP	1
4290001	FOODKING SETUP MANUAL	1
5920012	BAG-PLASTIC-12 X 15	1

TABLE 41. BAG ASSEMBLY - MEXICO - B4290005

PART NUMBER	DESCRIPTION	QTY.
WD429002	W.D.-429-115V/230V	1
4270022	COLUMN NUMBER CARD	1
4270025	LABEL-LOCATE FOOD HERE	1
4270048	LABELS-PRICE-DOM.-40 CENTS T	1
4270052	INSTR.-FOODKING MON.SETUP	1
4290001	FOODKING SETUP MANUAL	1
5920012	BAG-PLASTIC-12 X 15	1