SII VEND SMART CONTROL BOX ASSEMBLY

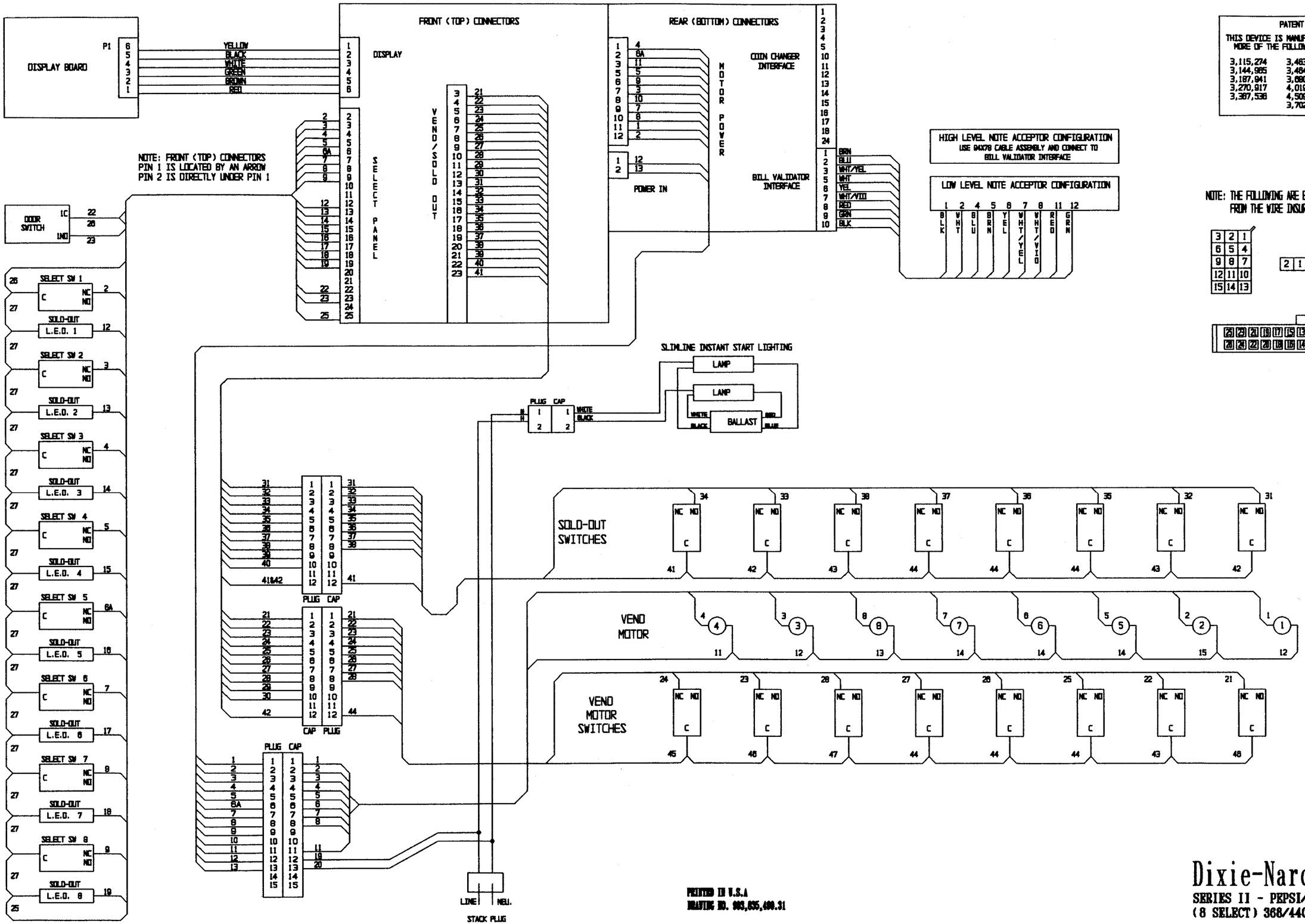

PATENT NOTICE

THIS DEVICE IS MANUFACTURED UNDER ONE OR MORE OF THE FOLLOWING U.S. PATENTS:

3,115,274	3,483,355	4,036,400
3,144,985	3,484,588	4,038,621
3,187,941	3,680,937	4,044,877
3,270,917	4,019,850	4,298,138
3,387,536	4,509,658	4,705,176
	3,702,184	4,264,000

NOTE: THE FOLLOWING ARE EXAMPLES OF WIRE LOCATIONS FROM THE WIRE INSURTION SIDE:

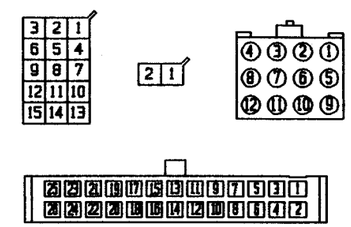

PRINTED IN U.S.A
DRAWING NO. 903,035,400.31

Dixie-Narco®

SERIES II - PEPSI/7-UP/DR. PEPPER
(8 SELECT) 368/440