SII VENO SMART CONTROL BOX ASSEMBLY

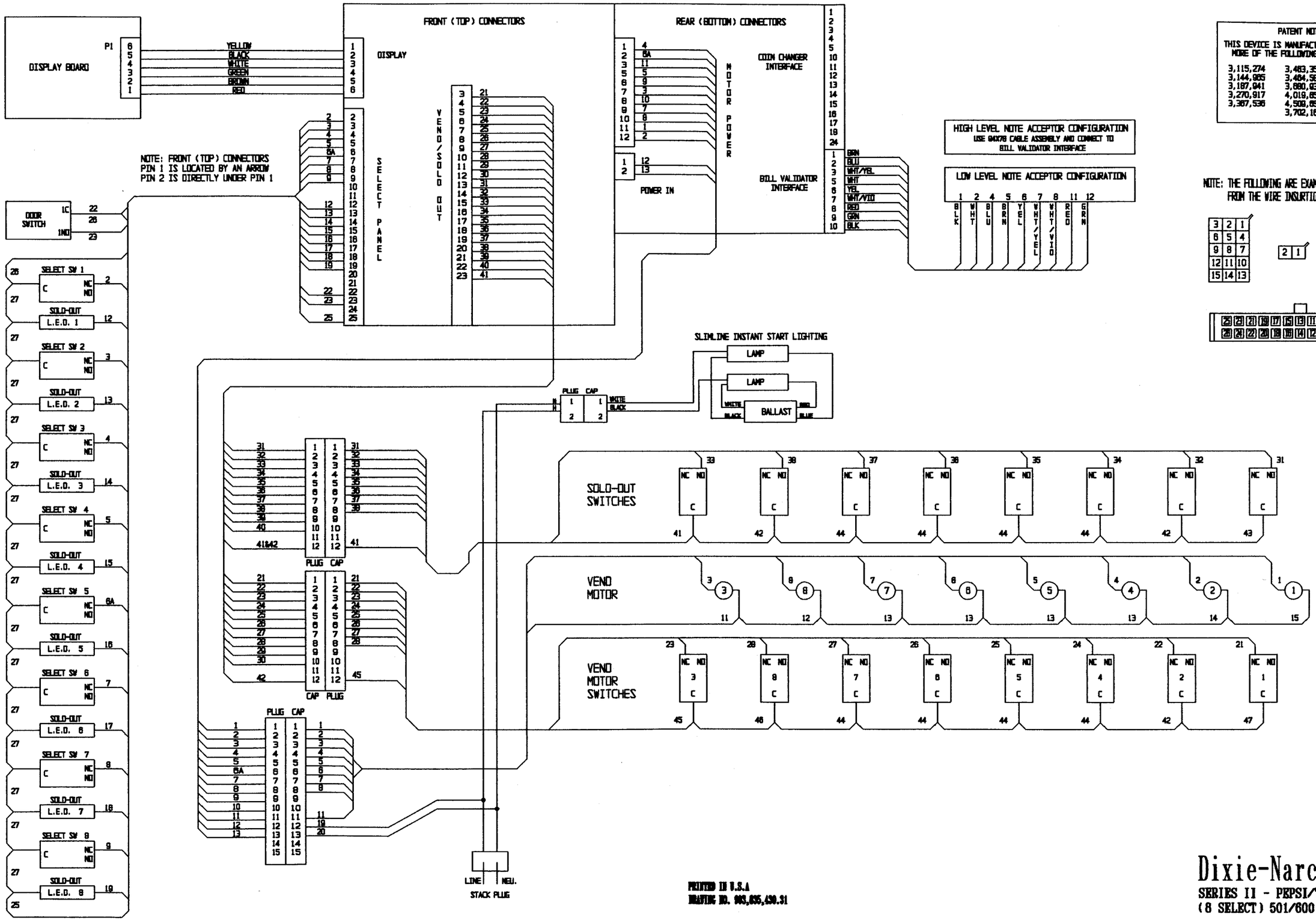

PATENT NOTICE

THIS DEVICE IS MANUFACTURED UNDER ONE OR MORE OF THE FOLLOWING U.S. PATENTS:

3,115,274	3,463,355	4,036,400
3,144,905	3,464,589	4,036,821
3,187,941	3,880,037	4,044,877
3,270,917	4,019,650	4,298,139
3,367,536	4,509,659	4,705,176
	3,702,184	4,264,000

NOTE: THE FOLLOWING ARE EXAMPLES OF WIRE LOCATIONS FROM THE WIRE INSURTION SIDE:

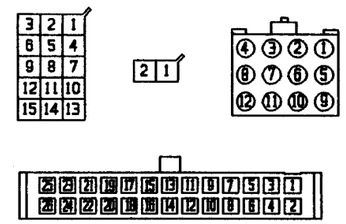

PRINTED IN U.S.A
DRAWING NO. 903,035,430.31

Dixie-Narco®

SERIES II - PEPSI/7-UP/DR. PEPPER
(8 SELECT) 501/600